W90 HMO L HJ

Screw-in socket, long, angle 90°

Properties

Connection 1	metric cylindrical outer thread
Sealing form 1	O-ring seal on screw-in socket
Connection 2	UN/UNF external threads
Sealing form 2	74° outer cone
Design	Screw-in socket, long
Construction	Angle 90°
Material	Steel
Surface	electro galvanised



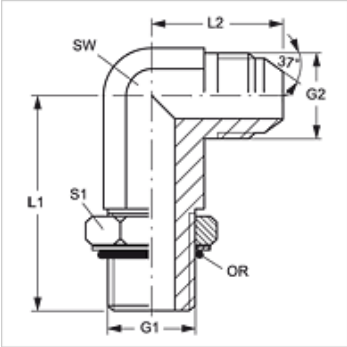

Item

Identification	G1	G2	L1 (mm)	L2 (mm)	AF (mm)	S1	OR
W90 HMO L 10 HJ 05	M 10 x 1	1/2"-20 UNF	49,5	24,0	13	15	8.0 x 1.5
W90 HMO L 12 HJ 05	M 12 x 1.5	1/2"-20 UNF	53,5	27,0	13	18	9.3 x 2.4
W90 HMO L 14 HJ 06	M 14 x 1.5	9/16"-18 UNF	56,5	27,0	14	20	11.3 x 2.4
W90 HMO L 16 HJ 06	M 16 x 1.5	9/16"-18 UNF	67,0	28,5	19	20	13.3 x 2.4
W90 HMO L 18 HJ 08	M 18 x 1.5	3/4"-16 UNF	67,0	31,5	19	25	15.3 x 2.4
W90 HMO L 18 HJ 10	M 18 x 1.5	7/8"-14 UNF	75,0	36,5	22	25	15.3 x 2.4
W90 HMO L 22 HJ 10	M 22 x 1.5	7/8"-14 UNF	78,0	36,5	22	28	19.3 x 2.4

SW, S1, S2 = With across flats

Despite careful checking, we cannot guarantee the accuracy of all information included on this site, and we accept no liability.