W90 HRK AB

Screw-in socket, angle 90°

HANSA-FLEX

Properties

Connection 1	BSPT conical external threads
Sealing form 1	thread seal
Connection 2	BSP nut thread
Sealing form 2	60° inner cone
Design	Screw-in sockets
Construction	Angle 90°
Material	Steel
Surface	electro galvanised



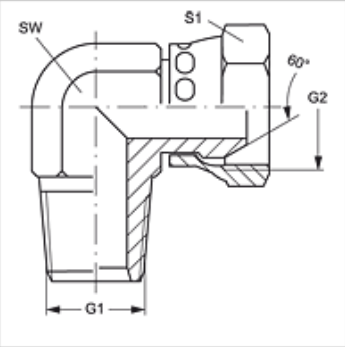

Item

Identification	G1	G2	AF (mm)	S1	S2
W90 HRK 04 AB	R 1/4" K	G 1/4" -19	14	19	19
W90 HRK 06 AB	R 3/8" K	G 3/8" -19	19	22	22
W90 HRK 08 AB	R 1/2" K	G 1/2" -14	22	27	27
W90 HRK 12 AB	R 3/4" K	G 3/4" -14	27	32	32
W90 HRK 16 AB	R 1" K	G 1" -11	33	41	41
W90 HRK 20 AB	R 1.1/4" K	G 1.1/4" -11	41	50	50
W90 HRK 24 AB	R 1.1/2" K	G 1.1/2" -11	48	60	60

SW, S1, S2 = With across flats

Despite careful checking, we cannot guarantee the accuracy of all information included on this site, and we accept no liability.