W90 HRK HJ

Screw-in socket, angle 90°

Properties

Connection 1	BSPT conical external threads
Sealing form 1	thread seal
Connection 2	UN/UNF external threads
Sealing form 2	74° outer cone
Design	Screw-in sockets
Construction	Angle 90°
Material	Steel
Surface	electro galvanised



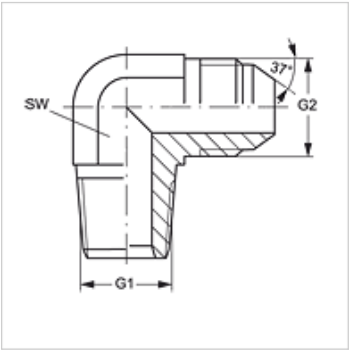

Item

Identification	G1	G2	AF (mm)
W90 HRK 02 HJ 04	R 1/8" K	7/16"-20 UNF	11
W90 HRK 02 HJ 05	R 1/8" K	1/2"-20 UNF	13
W90 HRK 02 HJ 06	R 1/8" K	9/16"-18 UNF	14
W90 HRK 04 HJ	R 1/4" K	7/16"-20 UNF	14
W90 HRK 04 HJ 05	R 1/4" K	1/2"-20 UNF	14
W90 HRK 04 HJ 06	R 1/4" K	9/16"-18 UNF	14
W90 HRK 04 HJ 08	R 1/4" K	3/4"-16 UNF	19
W90 HRK 06 HJ 04	R 3/8" K	7/16"-20 UNF	19
W90 HRK 06 HJ 05	R 3/8" K	1/2"-20 UNF	19
W90 HRK 06 HJ	R 3/8" K	9/16"-18 UNF	19
W90 HRK 06 HJ 08	R 3/8" K	3/4"-16 UNF	19
W90 HRK 06 HJ 10	R 3/8" K	7/8"-14 UNF	22
W90 HRK 08 HJ 04	R 1/2" K	7/16"-20 UNF	22
W90 HRK 08 HJ 06	R 1/2" K	9/16"-18 UNF	22
W90 HRK 08 HJ	R 1/2" K	3/4"-16 UNF	22
W90 HRK 08 HJ 10	R 1/2" K	7/8"-14 UNF	22
W90 HRK 08 HJ 12	R 1/2" K	1.1/16" -12 UN	27
W90 HRK 12 HJ 08	R 3/4" K	3/4"-16 UNF	27
W90 HRK 12 HJ 10	R 3/4" K	7/8"-14 UNF	27
W90 HRK 12 HJ	R 3/4" K	1.1/16" -12 UN	27
W90 HRK 12 HJ 16	R 3/4" K	1.5/16" -12 UN	33
W90 HRK 16 HJ 10	R 1" K	7/8"-14 UNF	33
W90 HRK 16 HJ 12	R 1" K	1.1/16" -12 UN	33
W90 HRK 16 HJ	R 1" K	1.5/16" -12 UN	33
W90 HRK 16 HJ 20	R 1" K	1.5/8" -12 UN	41
W90 HRK 20 HJ 16	R 1.1/4" K	1.5/16" -12 UN	41
W90 HRK 20 HJ	R 1.1/4" K	1.5/8" -12 UN	41
W90 HRK 24 HJ	R 1.1/2" K	1.7/8" -12 UN	48
W90 HRK 32 HJ	R 2" K	2.1/2" -12 UN	66

AF = Width across flats

Despite careful checking, we cannot guarantee the accuracy of all information included on this site, and we accept no liability.