W90 HROK HJR

Screw-in socket, angle 90°

Properties

Connection 1	BSP external thread, cylindrical
Sealing form 1	O-ring seal on screw-in socket
Connection 2	BSP cylindrical external threads
Sealing form 2	60° outer cone
Design	Screw-in sockets
Construction	Angle 90°
Standard connection 2	JIS B 8363
Material	Steel
Surface	electro galvanised



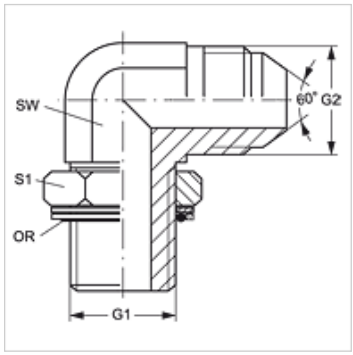

Item

Identification	G1 + G2	AF (mm)	S1	OR
W90 HROK 04 HJR	G 1/4" -19	19	14	10.77 x 2.62
W90 HROK 06 HJR	G 3/8" -19	22	19	13.94 x 2.62
W90 HROK 08 HJR	G 1/2" -14	27	22	17.86 x 2.62
W90 HROK 12 HJR	G 3/4" -14	36	27	23.47 x 2.62
W90 HROK 16 HJR	G 1" -11	41	33	29.74 x 3.53

SW, S1, S2 = With across flats

Spare parts

KAMMRING G	Spacer diaphragm ring, imperial

Despite careful checking, we cannot guarantee the accuracy of all information included on this site, and we accept no liability.