W90 HROK AOB

Screw-in socket, angle 90°

Properties

Connection 1	BSP external thread, cylindrical
Sealing form 1	O-ring and spacer diaphragm ring
Connection 2	BSP nut thread
Sealing form 2	60° outer cone with O-ring
Design	Screw-in sockets
Construction	straight
Material	Steel
Surface	electro galvanised



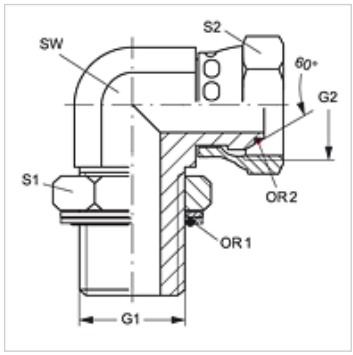

Item

Identification	G1	G2	AF (mm)	S1	S2	OR1	OR2
W90 HROK 04 AOB 02	G 1/4" -19	G 1/8" -28	14	20	14	10.77 x 2.62	4.5 x 1.5
W90 HROK 04 AOB	G 1/4" -19	G 1/4" -19	14	20	17	10.77 x 2.62	6.5 x 1.0
W90 HROK 06 AOB 04	G 3/8" -19	G 1/4" -19	19	24	17	13.94 x 2.62	6.5 x 1.0
W90 HROK 06 AOB	G 3/8" -19	G 3/8" -19	19	24	22	13.94 x 2.62	8.1 x 1.6
W90 HROK 08 AOB 06	G 1/2" -14	G 3/8" -19	22	28	27	17.86 x 2.62	8.1 x 1.6
W90 HROK 08 AOB	G 1/2" -14	G 1/2" -14	22	28	27	17.86 x 2.62	12.1 x 1.6
W90 HROK 08 AOB 12	G 1/2" -14	G 3/4" -14	27	28	32	17.86 x 2.62	17.1 x 1.6
W90 HROK 12 AOB 08	G 3/4" -14	G 1/2" -14	30	35	27	23.47 x 2.62	12.1 x 1.6
W90 HROK 12 AOB	G 3/4" -14	G 3/4" -14	30	35	32	23.47 x 2.62	17.1 x 1.6
W90 HROK 16 AOB	G 1" -11	G 1" -11	36	43	32	29.75 x 3.53	22.1 x 1.6
W90 HROK 20 AOB	G 1.1/4" -11	G 1.1/4" -11	50	52	50	37.69 x 3.53	29.1 x 1.6
W90 HROK 24 AOB	G 1.1/2" -11	G 1.1/2" -11	50	58	60	44.04 x 3.53	35.1 x 1.6

SW, S1, S2 = With across flats

Spare parts

KAMMRING G	Spacer diaphragm ring, imperial

Despite careful checking, we cannot guarantee the accuracy of all information included on this site, and we accept no liability.