W90 HROK HJ VA

Screw-in socket, angle 90°

Properties

Connection 1	BSP external thread, cylindrical
Sealing form 1	Thread socket with O-ring + spacer diaphragm ring
Connection 2	UN/UNF external threads
Sealing form 2	74° outer cone
Design	Adjustable direction screw-in socket
Construction	Angle 90°
Material	Stainless steel



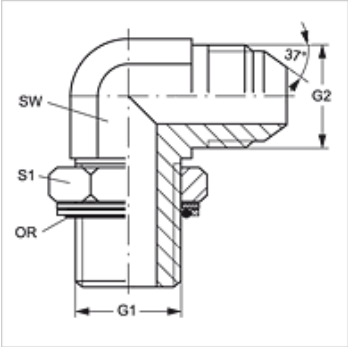

Ordering information

Seals of NBR

FPM (Viton) on request

Item

Identification	G1	G2	AF (mm)	S1	OR
W90 HROK 02 HJ 04 VA	G 1/8" -28	7/16"-20 UNF	11	14	8.00 x 2.00
W90 HROK 04 HJ VA	G 1/4" -19	7/16"-20 UNF	14	19	10.78 x 2.62
W90 HROK 04 HJ 05 VA	G 1/4" -19	1/2"-20 UNF	14	19	10.78 x 2.62
W90 HROK 04 HJ 06 VA	G 1/4" -19	9/16"-18 UNF	14	19	10.78 x 2.62
W90 HROK 06 HJ VA	G 3/8" -19	9/16"-18 UNF	19	22	13.94 x 2.62
W90 HROK 06 HJ 08 VA	G 3/8" -19	3/4"-16 UNF	19	22	13.94 x 2.62
W90 HROK 08 HJ VA	G 1/2" -14	3/4"-16 UNF	22	27	17.86 x 2.62
W90 HROK 08 HJ 10 VA	G 1/2" -14	7/8"-14 UNF	22	27	17.86 x 2.62
W90 HROK 08 HJ 12 VA	G 1/2" -14	1.1/16" -12 UN	27	27	17.86 x 2.62
W90 HROK 12 HJ VA	G 3/4" -14	1.1/16" -12 UN	27	36	23.47 x 2.62
W90 HROK 12 HJ 16 VA	G 3/4" -14	1.5/16" -12 UN	33	36	23.47 x 2.62
W90 HROK 16 HJ VA	G 1" -11	1.5/16" -12 UN	33	41	29.74 x 3.53
W90 HROK 16 HJ 20 VA	G 1" -11	1.5/8" -12 UN	41	41	29.74 x 3.53
W90 HROK 20 HJ VA	G 1.1/4" -11	1.5/8" -12 UN	41	50	37.69 x 3.53
W90 HROK 20 HJ 24 VA	G 1.1/4" -11	1.7/8" -12 UN	48	50	37.69 x 3.53
W90 HROK 24 HJ VA	G 1.1/2" -11	1.7/8" -12 UN	48	55	44.04 x 3.53

SW, S1, S2 = With across flats

Product versions

W90 HROK HJ	Screw-in socket, angle 90°, Steel

Spare parts

KAMMRING G	Spacer diaphragm ring, imperial

Despite careful checking, we cannot guarantee the accuracy of all information included on this site, and we accept no liability.