W90 IN HJ

Screw-on socket, IGN AGJ angle 90°

Properties

Connection 1	NPT internal thread
Sealing form 1	thread seal
Connection 2	UN/UNF external threads
Sealing form 2	74° outer cone
Design	Screw-on socket
Construction	Angle 90°
Material	Steel
Surface	electro galvanised

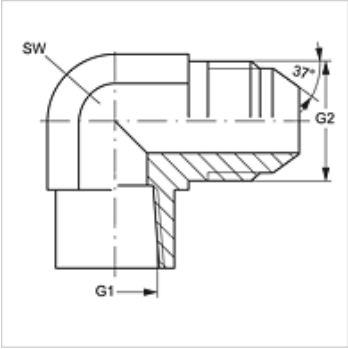

Item

Identification	G1	G2	AF (mm)
W90 IN 02 HJ 04	1/8" -27 NPT	7/16"-20 UNF	14
W90 IN 02 HJ 05	1/8" -27 NPT	1/2"-20 UNF	14
W90 IN 02 HJ 06	1/8" -27 NPT	9/16"-18 UNF	14
W90 IN 04 HJ	1/4" -18 NPT	7/16"-20 UNF	19
W90 IN 04 HJ 05	1/4" -18 NPT	1/2"-20 UNF	19
W90 IN 04 HJ 06	1/4" -18 NPT	9/16"-18 UNF	19
W90 IN 04 HJ 08	1/4" -18 NPT	3/4"-16 UNF	19
W90 IN 06 HJ	3/8" -18 NPT	9/16"-18 UNF	22
W90 IN 06 HJ 08	3/8" -18 NPT	3/4"-16 UNF	22
W90 IN 08 HJ	1/2" -14 NPT	3/4"-16 UNF	27
W90 IN 08 HJ 10	1/2" -14 NPT	7/8"-14 UNF	27
W90 IN 08 HJ 12	1/2" -14 NPT	1.1/16" -12 UN	27
W90 IN 12 HJ	3/4" -14 NPT	1.1/16" -12 UN	33
W90 IN 16 HJ	1" -11.5 NPT	1.5/16" -12 UN	41
W90 IN 20 HJ	1.1/4" -11.5 NPT	1.5/8" -12 UN	48
W90 IN 24 HJ	1.1/2" -11.5 NPT	1.7/8" -12 UN	64

AF = Width across flats

Product versions

W90 IN HJ VA	Screw-on socket, IGN AGJ angle 90°, Stainless steel

Despite careful checking, we cannot guarantee the accuracy of all information included on this site, and we accept no liability.