W90 O AJF

Screw-in socket, ORFS, angle 90°

HANSA-FLEX

Properties

Connection 1	UN/UNF external threads
Sealing form 1	O-ring seal on screw-in socket
Connection 2	ORFS nut threads
Sealing form 2	Flat seal
Design	Adjustable direction screw-in socket
Construction	Angle 90°
Material	Steel
Surface	electro galvanised



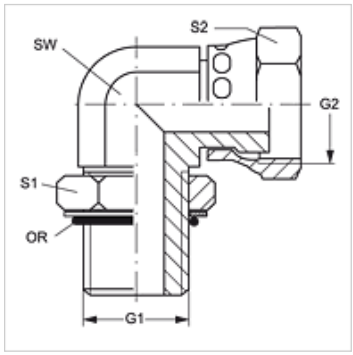

Item

Identification	G1	G2	AF (mm)	S1	S2	OR
W90 O 04 AJF	7/16"-20 UNF	9/16"-18 UNF	14	16	18	8.92 x 1.83
W90 O 06 AJF	9/16"-18 UNF	11/16" -16 UN	19	19	21	11.90 x 1.98
W90 O 08 AJF	3/4"-16 UNF	13/16" -16 UN	19	24	24	16.36 x 2.20
W90 O 10 AJF	7/8" -14 UNF	1" -14 UNS	27	27	29	19.18 x 2.46
W90 O 12 AJF	1.1/16" -12 UN	1.3/16" -12 UN	27	35	35	23.47 x 2.95
W90 O 16 AJF	1.5/16" -12 UN	1.7/16" -12 UN	33	41	41	29.74 x 2.95
W90 O 20 AJF	1.5/8" -12 UN	1.11/16" -12 UN	41	48	48	37.47 x 3.00
W90 O 24 AJF	1.7/8" -12 UN	2" -12 UN	48	54	57	43.69 x 3.00

SW, S1, S2 = With across flats

Despite careful checking, we cannot guarantee the accuracy of all information included on this site, and we accept no liability.