W90 O HJ VA

Screw-in socket, AGJ, angle 90°

Properties

Connection 1	UN/UNF external threads
Sealing form 1	O-ring seal on screw-in socket
Connection 2	UN/UNF external threads
Sealing form 2	74° outer cone
Design	Adjustable direction screw-in socket
Construction	Angle 90°
Material	Stainless steel



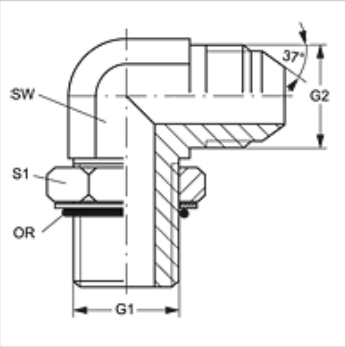

Ordering information

Seals of NBR

FPM (Viton) on request

Item

Identification	G1	G2	AF (mm)	S1	OR
W90 O 04 HJ VA	7/16"-20 UNF	7/16"-20 UNF	11	14	8.92 x 1.83
W90 O 05 HJ VA	1/2"-20 UNF	1/2"-20 UNF	13	16	10.52 x 1.83
W90 O 06 HJ 04 VA	9/16"-18 UNF	7/16"-20 UNF	14	17	11.90 x 1.98
W90 O 06 HJ VA	9/16"-18 UNF	9/16"-18 UNF	14	17	11.90 x 1.98
W90 O 06 HJ 08 VA	9/16"-18 UNF	3/4"-16 UNF	19	17	11.90 x 1.98
W90 O 08 HJ VA	3/4"-16 UNF	3/4"-16 UNF	19	22	16.36 x 2.20
W90 O 08 HJ 06 VA	3/4"-16 UNF	9/16"-18 UNF	19	22	16.36 x 2.20
W90 O 10 HJ VA	7/8" -14 UNF	7/8"-14 UNF	22	27	19.18 x 2.46
W90 O 12 HJ VA	1.1/16" -12 UN	1.1/16" -12 UN	32	27	23.47 x 2.95
W90 O 16 HJ VA	1.5/16" -12 UN	1.5/16" -12 UN	33	38	29.74 x 2.95

SW, S1, S2 = With across flats

Product versions

W90 O HJ	Screw-in socket, AGJ, angle 90°, Steel

Despite careful checking, we cannot guarantee the accuracy of all information included on this site, and we accept no liability.