W90 O HJOF VA

Screw-in socket, ORFS, angle 90°

Properties

Connection 1	UN/UNF external threads
Sealing form 1	O-ring seal on screw-in socket
Connection 2	ORFS external threads
Sealing form 2	flat seal with O-ring
Design	Adjustable direction screw-in socket
Construction	Angle 90°
Material	Stainless steel



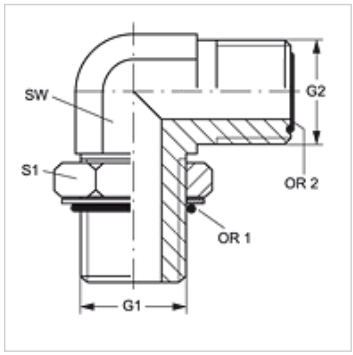

Ordering information

Seals of NBR

FPM (Viton) on request

Item

Identification	G1	G2	AF (mm)	S1	OR1	OR2
W90 O 04 HJOF VA	7/16"-20 UNF	9/16"-18 UNF	14	16	8.92 x 1.83	7.65 x 1.78
W90 O 04 HJOF 06 VA	7/16"-20 UNF	11/16" -16 UN	19	16	8.92 x 1.83	9.25 x 1.78
W90 O 06 HJOF 04 VA	9/16"-18 UNF	9/16"-18 UNF	19	19	11.89 x 1.98	7.65 x 1.78
W90 O 06 HJOF VA	9/16"-18 UNF	11/16" -16 UN	19	19	11.89 x 1.98	9.25 x 1.78
W90 O 06 HJOF 08 VA	9/16"-18 UNF	13/16" -16 UN	19	19	11.89 x 1.98	12.42 x 1.78
W90 O 08 HJOF 06 VA	3/4"-16 UNF	11/16" -16 UN	19	24	16.36 x 2.21	9.25 x 1.78
W90 O 08 HJOF VA	3/4"-16 UNF	13/16" -16 UN	19	24	16.36 x 2.21	12.42 x 1.78
W90 O 10 HJOF VA	7/8" -14 UNF	1" -14 UNS	27	27	19.18 x 2.46	15.60 x 1.78
W90 O 12 HJOF VA	1.1/16" -12 UN	1.3/16" -12 UN	30	36	23.47 x 2.95	18.77 x 1.78
W90 O 16 HJOF VA	1.5/16" -12 UN	1.7/16" -12 UN	37	41	29.74 x 2.95	23.52 x 1.78
W90 O 20 HJOF VA	1.5/8" -12 UN	1.11/16" -12 UN	41	48	37.47 x 3.00	29.87 x 1.78
W90 O 24 HJOF VA	1.7/8" -12 UN	2" -12 UN	48	54	43.69 x 3.00	37.82 x 1.78

SW, S1, S2 = With across flats

Product versions

W90 O HJOF	Screw-in socket, ORFS, angle 90°, Steel

Despite careful checking, we cannot guarantee the accuracy of all information included on this site, and we accept no liability.