WB45 AOL

Connection socket, angle 45°

Properties

Connection 1	metric nut thread
Sealing form 1	24° outer cone with O-ring
Connection 2	metric nut thread
Sealing form 2	24° outer cone with O-ring
Design	Connecting socket (short pipe bend)
Construction	Angle 45°
Material	Steel
Surface	electro galvanised



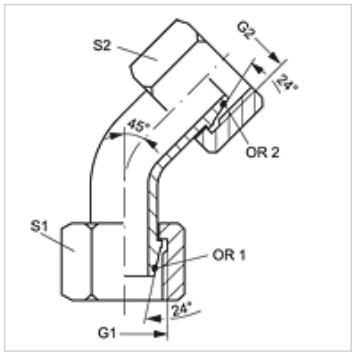

Note

Information about fitting, installation, pressure loads and permissible operating temperatures can be found in the technical information for pipe fittings.

Item

Identification	Series	External pipe Ø (mm)	Calculation pressure (bar)	G1 + G2	S1	S2	OR1 + OR2
WB45 NW 04 AOL	L	6	315	M 12 x 1.5	14	14	4.0 x 1.5
WB45 NW 06 AOL	L	8	315	M 14 x 1.5	17	17	6.0 x 1.5
WB45 NW 08 AOL	L	10	315	M 16 x 1.5	19	19	7.5 x 1.5
WB45 NW 10 AOL	L	12	315	M 18 x 1.5	22	22	9.0 x 1.5
WB45 NW 13 AOL	L	15	315	M 22 x 1.5	27	27	12.0 x 2.0
WB45 NW 16 AOL	L	18	315	M 26 x 1.5	32	32	15.0 x 2.0
WB45 NW 20 AOL	L	22	160	M 30 x 2	36	36	20.0 x 2.0
WB45 NW 25 AOL	L	28	160	M 36 x 2	41	41	26.0 x 2.0
WB45 NW 32 AOL	L	35	160	M 45 x 2	50	50	32.0 x 2.5
WB45 NW 40 AOL	L	42	160	M 52 x 2	60	60	38.0 x 2.5

Series: LL = Very light L = Light S = Heavy – SW, S1, S2 = With across flats

Despite careful checking, we cannot guarantee the accuracy of all information included on this site, and we accept no liability.