HVM ED VA

Non-return valve, screw-in connection

Properties

Connection 1	metric cylindrical outer thread
Sealing form 1	Shape E
Connection 2	metric cylindrical outer thread
Sealing form 2	24° inner cone
Design	Non-return valve, screw-in connection
Construction	straight
Standard	DIN 3865
Scope of supply	Socket with union nut and cutting ring
Material	Stainless steel



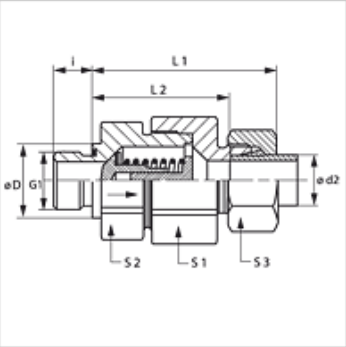

Note

Information about fitting, installation, pressure loads and permissible operating temperatures can be found in the technical information for pipe fittings.

Description

Direction of flow from screw-in pin

Ordering information

Seals of NBR
FPM (Viton) on request
Also available with opening pressure of 0.2; 0.5; 2; 3 bar

Item

Identification	Opening pressure	Series	Operating pressure	Ø d2 (mm)	G1	Ø D (mm)	i (mm)	L1 (mm)	L2 (mm)	S1	S2	S3
HVM NW 04 HL ED VA	approx. 1 bar	L	PN 250	6	M 10 x 1	14	8	42,5	28,0	17	17	14
HVM NW 06 HL ED VA	approx. 1 bar	L	PN 250	8	M 12 x 1.5	17	12	43,5	29,0	19	19	17
HVM NW 08 HL ED VA	approx. 1 bar	L	PN 250	10	M 14 x 1.5	19	12	53,0	38,5	24	22	19
HVM NW 10 HL ED VA	approx. 1 bar	L	PN 250	12	M 16 x 1.5	22	12	57,0	42,5	30	27	22
HVM NW 13 HL ED VA	approx. 1 bar	L	PN 250	15	M 18 x 1.5	24	12	60,5	45,5	32	27	27
HVM NW 16 HL ED VA	approx. 1 bar	L	PN 160	18	M 22 x 1.5	27	14	66,0	50,0	36	36	32
HVM NW 20 HL ED VA	approx. 1 bar	L	PN 160	22	M 26 x 1.5	32	16	71,0	55,0	46	41	36
HVM NW 25 HL ED VA	approx. 1 bar	L	PN 100	28	M 33 x 2	40	18	79,5	63,0	50	55	41
HVM NW 32 HL ED VA	approx. 1 bar	L	PN 100	35	M 42 x 2	50	20	90,5	69,0	60	60	50
HVM NW 40 HL ED VA	approx. 1 bar	L	PN 100	42	M 48 x 2	55	22	91,0	68,5	70	65	60
HVM NW 03 HS ED VA	approx. 1 bar	S	PN 400	6	M 12 x 1.5	17	12	46,0	31,5	19	19	17
HVM NW 04 HS ED VA	approx. 1 bar	S	PN 400	8	M 14 x 1.5	19	12	46,0	31,5	19	19	19
HVM NW 06 HS ED VA	approx. 1 bar	S	PN 400	10	M 16 x 1.5	22	12	54,0	38,0	24	22	22
HVM NW 08 HS ED VA	approx. 1 bar	S	PN 400	12	M 18 x 1.5	24	12	57,0	41,0	27	24	24
HVM NW 10 HS ED VA	approx. 1 bar	S	PN 315	14	M 20 x 1.5	26	14	62,0	44,5	32	27	27
HVM NW 13 HS ED VA	approx. 1 bar	S	PN 315	16	M 22 x 1.5	27	14	66,0	48,0	36	32	30
HVM NW 16 HS ED VA	approx. 1 bar	S	PN 250	20	M 27 x 2	32	16	73,5	52,0	46	41	36
HVM NW 20 HS ED VA	approx. 1 bar	S	PN 250	25	M 33 x 2	40	18	78,5	54,5	50	46	46
HVM NW 25 HS ED VA	approx. 1 bar	S	PN 250	30	M 42 x 2	50	20	90,5	64,0	60	60	50
HVM NW 32 HS ED VA	approx. 1 bar	S	PN 250	38	M 48 x 2	55	22	100,0	69,5	70	65	60

Series: LL = Very light L = Light S = Heavy – PN = Nominal pressure PB = Max. operating pressure – Ø d2 = External pipe diameter

Product versions

HVM ED	Non-return valve, screw-in connection, Steel
XHVM ED VA	Non-return valve, screw-in connection, Stainless steel

Spare parts

WD V	Soft seal for ED fittings

Despite careful checking, we cannot guarantee the accuracy of all information included on this site, and we accept no liability.