HVO HJOF

Non-return valve, screw-in connection

Properties

Connection 1	UN/UNF external threads
Sealing form 1	O-ring seal
Connection 2	ORFS external threads
Sealing form 2	flat seal with O-ring
Design	Non-return valve, screw-in connection
Construction	straight
Material	Steel
Surface	electro galvanised

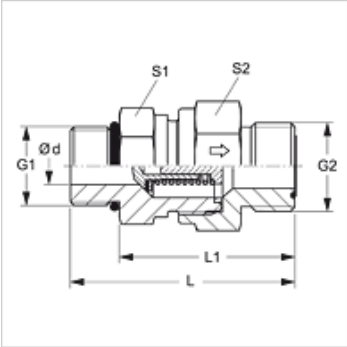

Description

Direction of flow from screw-in pin

Ordering information

Also available with opening pressure of 0.2; 0.5; 2; 3; 5; 6 bar

Item

Identification	Opening pressure	Operating pressure	Ø d (mm)	G1	G2	L (mm)	L1 (mm)	S1	S2
HVO 04 HJOF	approx. 1 bar	PN 400	3,5	7/16"-20 UNF	9/16"-18 UNF	45,5	34,5	19	19
HVO 06 HJOF	approx. 1 bar	PN 400	5,5	9/16"-18 UNF	11/16" -16 UN	54,5	42,5	22	24
HVO 08 HJOF	approx. 1 bar	PN 400	5,5	3/4"-16 UNF	13/16" -16 UN	60,5	46,5	24	27
HVO 10 HJOF	approx. 1 bar	PN 315	11,5	7/8" -14 UNF	1" -14 UNS	71,0	55,0	32	36
HVO 12 HJOF	approx. 1 bar	PN 250	15,0	1.1/16" -12 UN	1.3/16" -12 UN	79,0	60,5	41	46
HVO 16 HJOF	approx. 1 bar	PN 250	19,0	1.5/16" -12 UN	1.7/16" -12 UN	82,5	64,0	46	50
HVO 20 HJOF	approx. 1 bar	PN 250	24,0	1.5/8" -12 UN	1.11/16" -12 UN	92,5	74,0	60	60
HVO 24 HJOF	approx. 1 bar	PN 250	29,0	1.7/8" -12 UN	2" -12 UN	99,5	61,0	65	70

PN = Nominal pressure PB = Max. operating pressure – SW, S1, S2 = With across flats

Despite careful checking, we cannot guarantee the accuracy of all information included on this site, and we accept no liability.