# HVR ED HJOF

Non-return valve, screw-in connection

## Properties

| | |
|---|---|
| **Connection 1** | BSP external thread, cylindrical |
| **Sealing form 1** | Shape E |
| **Connection 2** | ORFS external threads |
| **Sealing form 2** | flat seal with O-ring |
| **Design** | Non-return valve, screw-in connection |
| **Construction** | straight |
| **Material** | Steel |
| **Surface** | electro galvanised |



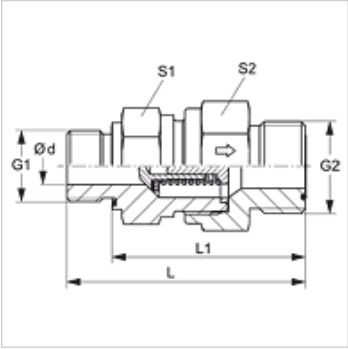


## Description

Direction of flow from screw-in pin

## Ordering information

Also available with opening pressure of 0.2; 0.5; 2; 3; 5; 6 bar

## Item

| Identification | Opening pressure | Operating pressure | Ø d (mm) | G1 | G2 | L (mm) | L1 (mm) | S1 | S2 |
|---|---|---|---|---|---|---|---|---|---|
| **HVR 02 ED 04 HJOF** | approx. 1 bar | PN 400 | 3,5 | G 1/8" -28 | 9/16"-18 UNF | 44,5 | 36,5 | 19 | 19 |
| **HVR 04 ED 06 HJOF** | approx. 1 bar | PN 400 | 6,5 | G 1/4" -19 | 11/16" -16 UN | 56,4 | 44,5 | 22 | 24 |
| **HVR 06 ED 08 HJOF** | approx. 1 bar | PN 400 | 7,5 | G 3/8" -19 | 13/16" -16 UN | 61,5 | 49,5 | 24 | 27 |
| **HVR 08 ED 10 HJOF** | approx. 1 bar | PN 315 | 11,5 | G 1/2" -14 | 1" -14 UNS | 70,0 | 56,0 | 32 | 36 |
| **HVR 12 ED HJOF** | approx. 1 bar | PN 250 | 15,0 | G 3/4" -14 | 1.3/16" -12 UN | 77,5 | 63,5 | 41 | 46 |
| **HVR 16 ED HJOF** | approx. 1 bar | PN 250 | 19,0 | G 1" -11 | 1.7/16" -12 UN | 84,0 | 66,0 | 46 | 50 |
| **HVR 20 ED HJOF** | approx. 1 bar | PN 250 | 24,0 | G 1.1/4" -11 | 1.11/16" -12 UN | 95,0 | 75,0 | 60 | 60 |
| **HVR 24 ED HJOF** | approx. 1 bar | PN 250 | 29,0 | G 1.1/2" -11 | 2" -12 UN | 105,0 | 83,0 | 65 | 70 |

PN = Nominal pressure PB = Max. operating pressure

## Spare parts

| | |
|---|---|
| **WD** | Soft seal for ED fittings |

*Despite careful checking, we cannot guarantee the accuracy of all information included on this site, and we accept no liability.*