HZM ED
Non-return valve, screw-in connection

Properties

Connection 1	metric cylindrical outer thread
Sealing form 1	Shape E
Connection 2	metric cylindrical outer thread
Sealing form 2	24° inner cone
Design	Non-return valve, screw-in connection
Construction	straight
Standard	DIN 3865
Scope of supply	Socket with union nut and cutting ring
Material	Steel
Surface	electro galvanised



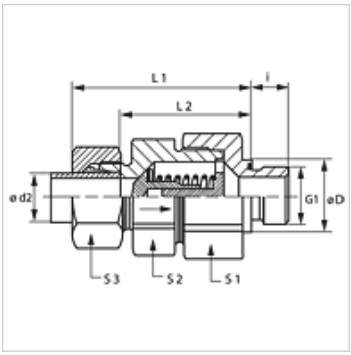

Note

Information about fitting, installation, pressure loads and permissible operating temperatures can be found in the technical information for pipe fittings.

Description

Direction of flow to screw-in pin

Ordering information

Also available with opening pressure of 0.2; 0.5; 2; 3; 5 bar.

Item

Identification	Opening pressure	Series	Operating pressure	Ø d2 (mm)	G1	Ø D (mm)	i (mm)	L1 (mm)	L2 (mm)	S1	S2	S3
HZM NW 04 HL ED	approx. 1 bar	L	PN 250	6	M 10 x 1	14	8	41,0	26,5	17	17	14
HZM NW 06 HL ED	approx. 1 bar	L	PN 250	8	M 12 x 1.5	17	12	43,0	28,5	19	19	17
HZM NW 08 HL ED	approx. 1 bar	L	PN 250	10	M 14 x 1.5	19	12	53,0	38,5	24	22	19
HZM NW 10 HL ED	approx. 1 bar	L	PN 250	12	M 16 x 1.5	22	12	55,0	40,5	30	27	22
HZM NW 13 HL ED	approx. 1 bar	L	PN 250	15	M 18 x 1.5	24	12	57,5	42,5	32	27	27
HZM NW 16 HL ED	approx. 1 bar	L	PN 160	18	M 22 x 1.5	27	14	64,0	48,0	36	36	32
HZM NW 20 HL ED	approx. 1 bar	L	PN 160	22	M 26 x 1.5	32	16	72,0	56,0	46	41	36
HZM NW 25 HL ED	approx. 1 bar	L	PN 100	28	M 33 x 2	40	18	80,5	64,0	55	50	41
HZM NW 32 HL ED	approx. 1 bar	L	PN 100	35	M 42 x 2	50	20	91,5	70,0	60	60	50
HZM NW 40 HL ED	approx. 1 bar	L	PN 100	42	M 48 x 2	55	22	93,0	70,5	70	65	60
HZM NW 03 HS ED	approx. 1 bar	S	PN 400	6	M 12 x 1.5	17	12	46,0	31,5	19	19	17
HZM NW 04 HS ED	approx. 1 bar	S	PN 400	8	M 14 x 1.5	19	12	46,0	31,5	19	19	19
HZM NW 06 HS ED	approx. 1 bar	S	PN 400	10	M 16 x 1.5	22	12	54,0	38,0	24	22	22
HZM NW 08 HS ED	approx. 1 bar	S	PN 400	12	M 18 x 1.5	24	12	57,0	41,0	27	24	24
HZM NW 10 HS ED	approx. 1 bar	S	PN 315	14	M 20 x 1.5	26	14	61,0	43,5	32	27	27
HZM NW 13 HS ED	approx. 1 bar	S	PN 315	16	M 22 x 1.5	27	14	64,0	46,0	36	32	30
HZM NW 16 HS ED	approx. 1 bar	S	PN 250	20	M 27 x 2	32	16	71,5	50,0	46	41	36
HZM NW 20 HS ED	approx. 1 bar	S	PN 250	25	M 33 x 2	40	18	78,5	54,5	50	46	46
HZM NW 25 HS ED	approx. 1 bar	S	PN 250	30	M 42 x 2	50	20	90,5	64,0	60	60	50
HZM NW 32 HS ED	approx. 1 bar	S	PN 250	38	M 48 x 2	55	22	102,0	71,5	70	65	60

Series: LL = Very light L = Light S = Heavy – PN = Nominal pressure PB = Max. operating pressure – Ø d2 = External pipe diameter

Product versions

HZM ED VA	Non-return valve, screw-in connection, Stainless steel
XHZM ED	Non-return valve, screw-in connection, Steel

Accessories

RD FEDER	Spring for non-return valve
RD FEDER PT	Spring for non-return valve

Despite careful checking, we cannot guarantee the accuracy of all information included on this site, and we accept no liability.

Spare parts

WD	Soft seal for ED fittings

Despite careful checking, we cannot guarantee the accuracy of all information included on this site, and we accept no liability.