HZR ED HJOF

Non-return valve, screw-in connection

Properties

Connection 1	BSP external thread, cylindrical
Sealing form 1	Shape E
Connection 2	ORFS external threads
Sealing form 2	flat seal with O-ring
Design	Non-return valve, screw-in connection
Construction	straight
Material	Steel
Surface	electro galvanised



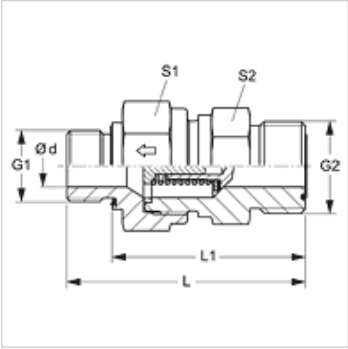

Description

Direction of flow to screw-in pin

Ordering information

Also available with opening pressure of 0.2; 0.5; 2; 3; 5; 6 bar

Item

Identification	Opening pressure	Operating pressure	Ø d (mm)	G1	G2	L (mm)	L1 (mm)	S1	S2
HZR 02 ED 04 HJOF	approx. 1 bar	PN 400	3,5	G 1/8" -28	9/16"-18 UNF	44,5	36,5	19	19
HZR 04 ED 06 HJOF	approx. 1 bar	PN 400	6,5	G 1/4" -19	11/16" -16 UN	56,4	44,5	22	24
HZR 06 ED 08 HJOF	approx. 1 bar	PN 400	7,5	G 3/8" -19	13/16" -16 UN	61,5	49,5	24	27
HZR 08 ED 10 HJOF	approx. 1 bar	PN 315	11,5	G 1/2" -14	1" -14 UNS	70,0	56,0	32	36
HZR 12 ED HJOF	approx. 1 bar	PN 250	15,0	G 3/4" -14	1.3/16" -12 UN	77,5	53,5	41	46
HZR 16 ED HJOF	approx. 1 bar	PN 250	19,0	G 1" -11	1.7/16" -12 UN	84,0	66,0	46	50
HZR 20 ED HJOF	approx. 1 bar	PN 250	24,0	G 1.1/4" -11	1.11/16" -12 UN	95,0	75,0	60	60
HZR 24 ED HJOF	approx. 1 bar	PN 250	29,0	G 1.1/2" -11	2" -12 UN	105,0	83,0	65	70

PN = Nominal pressure PB = Max. operating pressure

Spare parts

WD	Soft seal for ED fittings

Despite careful checking, we cannot guarantee the accuracy of all information included on this site, and we accept no liability.