PR (M)

Metric precision steel pipe, EN 10305-4, E235+N

HANSA-FLEX

Properties

Design	Precision steel pipe, metric
Standard	DIN EN 10305-4
Material	Steel ST 37.4 NBK (1.0255)
Surface	phosphate treated and oiled
Pipe length	6 m

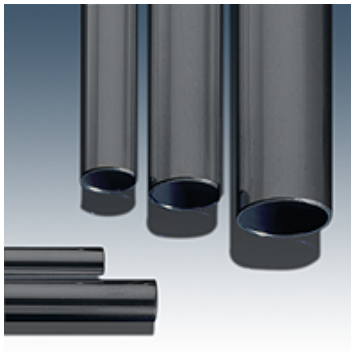

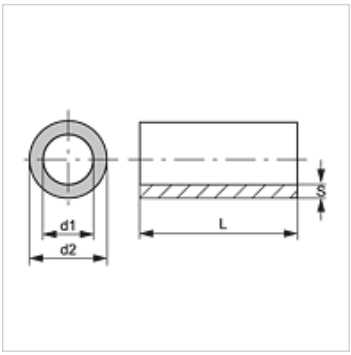

Note

The pressure figures are based on straight pipes.
The appropriate wall thickness needs to be calculated for pipes with bends as stipulated in DIN EN 13480-4.

Additional information

Calculation as in DIN 2413 (draft)
Specific load I: static (up to 100 °C)
Specific load III: dynamic (up to 200 °C) stress range = P bar
Strength parameter: K 235 [N/mm2]
Safety coefficient: S 1.5
Fatigue strength: σSch/D 225 [N/mm2]
Tolerance: DIN 10305-4

Item

Identification	Ø d2 (mm)	AD tolerance +/- (mm)	Ø d1 (mm)	ID tolerance +/- (mm)	S (mm)	Specific load I (bar)	Specific load III (bar)
PR 60-8	60,0	-	44,0	-	8,00	-	-
PR 18-4	18,0	0,08	10,0	0,15	4,00	-	-
PR 04-0.5	4,0	0,08	3,0	0,15	0,50	210	189
PR 04-0.75	4,0	0,08	2,5	0,15	0,75	405	345
PR 04-1	4,0	0,08	2,0	0,15	1,00	602	484
PR 05-0.75	5,0	0,08	3,5	0,15	0,75	325	282
PR 05-1	5,0	0,08	3,0	0,15	1,00	482	400
PR 06-0.75	6,0	0,08	4,5	0,12	0,75	286	251
PR 06-1	6,0	0,08	4,0	0,12	1,00	416	352
PR 06-1.5	6,0	0,08	3,0	0,15	1,50	663	524
PR 06-2	6,0	0,08	2,0	0,15	2,00	924	683
PR 06-2.25	6,0	0,08	1,5	0,15	2,25	1053	755
PR 08-1	8,0	0,08	6,0	0,10	1,00	320	278
PR 08-1.5	8,0	0,08	5,0	0,10	1,50	516	424
PR 08-2	8,0	0,08	4,0	0,15	2,00	693	543
PR 08-2.5	8,0	0,08	3,0	0,15	2,50	888	663
PR 10-1	10,0	0,08	8,0	0,08	1,00	263	232
PR 10-1.5	10,0	0,08	7,0	0,12	1,50	407	345
PR 10-2	10,0	0,08	6,0	0,15	2,00	554	451
PR 10-2.5	10,0	0,08	5,0	0,15	2,50	711	555
PR 10-3	10,0	0,08	4,0	0,15	3,00	867	650
PR 10-4	10,0	0,08	2,0	0,15	4,00	1178	820
PR 12-1	12,0	0,08	10,0	0,08	1,00	219	196
PR 12-1.5	12,0	0,08	9,0	0,10	1,50	344	297
PR 12-2	12,0	0,08	8,0	0,12	2,00	469	391
PR 12-2.5	12,0	0,08	7,0	0,15	2,50	592	477
PR 12-3	12,0	0,08	6,0	0,15	3,00	723	562
PR 12-4	12,0	0,08	4,0	0,15	4,00	984	717
PR 14-1	14,0	0,08	12,0	0,08	1,00	187	169
PR 14-1.5	14,0	0,08	11,0	0,08	1,50	299	262
PR 14-2	14,0	0,08	10,0	0,10	2,00	407	345
PR 14-2.5	14,0	0,08	9,0	0,12	2,50	514	423
PR 14-3	14,0	0,08	8,0	0,15	3,00	619	495
PR 14-3.5	14,0	0,08	7,0	0,15	3,50	731	568
PR 15-1	15,0	0,08	13,0	0,08	1,00	175	159

Despite careful checking, we cannot guarantee the accuracy of all information included on this site, and we accept no liability.

PR (M)

Metric precision steel pipe, EN 10305-4, E235+N

HANSA-FLEX

Item							
Identification	Ø d2 (mm)	AD tolerance +/- (mm)	Ø d1 (mm)	ID tolerance +/- (mm)	S (mm)	Specific load I (bar)	Specific load III (bar)
PR 15-1.5	15,0	0,08	12,0	0,08	1,50	279	246
PR 15-2	15,0	0,08	11,0	0,10	2,00	380	324
PR 15-2.5	15,0	0,08	10,0	0,12	2,50	480	398
PR 15-3	15,0	0,08	9,0	0,15	3,00	578	467
PR 16-1	16,0	0,08	14,0	0,08	1,00	164	149
PR 16-1.5	16,0	0,08	13,0	0,08	1,50	262	231
PR 16-2	16,0	0,08	12,0	0,15	2,00	346	298
PR 16-2.5	16,0	0,08	11,0	0,12	2,50	450	377
PR 16-3	16,0	0,08	10,0	0,15	3,00	542	442
PR 16-4	16,0	0,08	8,0	0,15	4,00	738	572
PR 17-2	17,0	0,08	13,0	0,15	2,00	325	281
PR 18-1	18,0	0,08	16,0	0,08	1,00	146	133
PR 18-1.5	18,0	0,08	15,0	0,08	1,50	233	207
PR 18-2	18,0	0,08	14,0	0,08	2,00	320	278
PR 18-2.5	18,0	0,08	13,0	0,15	2,50	395	335
PR 18-3	18,0	0,08	12,0	0,15	3,00	482	400
PR 20-1.5	20,0	0,08	17,0	0,08	1,50	209	188
PR 20-2	20,0	0,08	16,0	0,08	2,00	288	252
PR 20-2.5	20,0	0,08	15,0	0,15	2,50	355	305
PR 20-3	20,0	0,08	14,0	0,15	3,00	433	364
PR 20-3.5	20,0	0,08	13,0	0,15	3,50	512	421
PR 20-4	20,0	0,08	12,0	0,15	4,00	590	475
PR 22-1	22,0	0,08	20,0	0,08	1,00	119	109
PR 22-1.5	22,0	0,08	19,0	0,08	1,50	190	172
PR 22-2	22,0	0,08	18,0	0,08	2,00	262	231
PR 22-2.5	22,0	0,08	17,0	0,08	2,50	333	288
PR 22-3	22,0	0,08	16,0	0,15	3,00	394	335
PR 25-1	25,0	0,08	23,0	0,08	1,00	105	97
PR 25-1.5	25,0	0,08	20,0	0,08	1,50	167	152
PR 25-2	25,0	0,08	21,0	0,08	2,00	230	205
PR 25-2.5	25,0	0,08	20,0	0,08	2,50	293	256
PR 25-3	25,0	0,08	19,0	0,15	3,00	347	299
PR 25-3.5	25,0	0,08	18,0	0,15	3,50	409	347
PR 25-4	25,0	0,08	17,0	0,15	4,00	472	393
PR 25-4.5	25,0	0,08	16,0	0,15	4,50	535	437
PR 25-5	25,0	0,08	15,0	0,15	5,00	597	480
PR 28-1	28,0	0,08	26,0	0,08	1,00	93	87
PR 28-1.5	28,0	0,08	25,0	0,08	1,50	149	136
PR 28-2	28,0	0,08	24,0	0,08	2,00	205	184
PR 28-2.5	28,0	0,08	23,0	0,08	2,50	261	231
PR 28-3	28,0	0,08	20,0	0,15	3,00	309	270
PR 28-3.5	28,0	-	21,0	-	3,50	-	-
PR 28-4	28,0	0,08	20,0	0,15	4,00	421	355
PR 28-4.5	28,0	0,08	19,0	0,15	4,50	477	396
PR 28-5	28,0	0,08	18,0	0,15	5,00	533	436
PR 30-1.5	30,0	0,08	27,0	0,08	1,50	139	128
PR 30-2	30,0	0,08	26,0	0,08	2,00	192	173
PR 30-2.5	30,0	0,08	25,0	0,08	2,50	244	217
PR 30-3	30,0	0,08	24,0	0,15	3,00	289	253
PR 30-4	30,0	0,08	20,0	0,15	4,00	393	334
PR 30-5	30,0	0,08	20,0	0,15	5,00	498	411
PR 30-6	30,0	0,15	18,0	0,15	6,00	595	478
PR 32-1.5	32,0	0,08	29,0	0,08	1,50	131	120
PR 32-2.5	32,0	-	27,0	-	2,50	-	-
PR 32-4	32,0	-	24,0	-	4,00	-	-
PR 35-2	35,0	0,15	31,0	0,15	2,00	152	138
PR 35-2.5	35,0	0,15	30,0	0,15	2,50	196	177
PR 35-3	35,0	0,15	29,0	0,15	3,00	241	214
PR 35-4	35,0	0,15	27,0	0,15	4,00	331	286
PR 35-5	35,0	0,15	25,0	0,15	5,00	420	355
PR 35-6	35,0	0,15	23,0	0,15	6,00	510	420
PR 38-2.5	38,0	0,15	33,0	0,15	2,50	181	163
PR 38-3	38,0	0,15	32,0	0,15	3,00	222	198

Despite careful checking, we cannot guarantee the accuracy of all information included on this site, and we accept no liability.

PR (M)

Metric precision steel pipe, EN 10305-4, E235+N

HANSA-FLEX

Item							
Identification	Ø d2 (mm)	AD tolerance +/- (mm)	Ø d1 (mm)	ID tolerance +/- (mm)	S (mm)	Specific load I (bar)	Specific load III (bar)
PR 38-4	38,0	0,15	30,0	0,15	4,00	305	266
PR 38-5	38,0	0,15	28,0	0,15	5,00	387	330
PR 38-6	38,0	0,15	26,0	0,15	6,00	469	391
PR 38-7	38,0	0,15	24,0	0,15	7,00	552	449
PR 40-6	40,0	-	28,0	-	6,00	-	-
PR 42-2	42,0	0,20	38,0	0,20	2,00	119	109
PR 42-3	42,0	0,20	36,0	0,20	3,00	193	174
PR 42-4	42,0	0,20	34,0	0,20	4,00	268	236
PR 42-5	42,0	0,20	32,0	0,20	5,00	343	296
PR 45-5	45,0	0,20	35,0	0,20	5,00	320	278
PR 50-4	50,0	0,20	42,0	0,20	4,00	225	201
PR 50-5	50,0	0,20	40,0	0,20	5,00	288	252
PR 50-6	50,0	0,20	38,0	0,20	6,00	350	302
PR 60-3	60,0	0,25	54,0	0,25	3,00	130	119
PR 60-4	60,0	0,25	52,0	0,25	4,00	182	165
PR 60-6	60,0	-	48,0	-	6,00	-	-
PR 60-10	60,0	0,25	40,0	0,25	10,00	496	410
PR 65-8	65,0	0,30	49,0	0,30	8,00	356	306
PR 80-10	80,0	0,35	60,0	0,35	10,00	364	312

Despite careful checking, we cannot guarantee the accuracy of all information included on this site, and we accept no liability.