RBS IR

Burst pipe protection IR

Properties

Material	Steel
Operating pressure	max. 400 bar

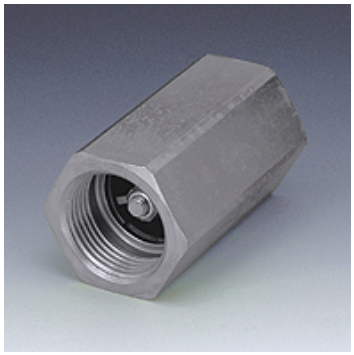

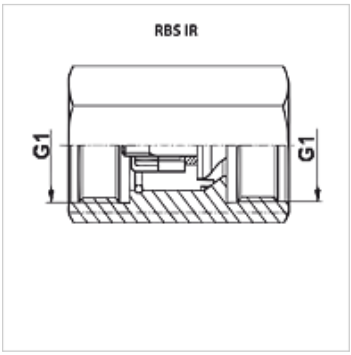

Item

Identification	Operating pressure (bar)	G1	Closing quantity (L/min)	Weight (kg)
RBS 06-20 IR 10	400,0	G 3/8" -19	20	0,10
RBS 06-40 IR 10	400,0	G 3/8" -19	40	0,10
RBS 10-40 IR 13	315,0	G 1/2" -14	40	0,16
RBS 10-63 IR 13	315,0	G 1/2" -14	63	0,17
RBS 10-90 IR 13	315,0	G 1/2" -14	90	0,17
RBS 16-200 IR 25	250,0	G 1" -11	200	0,35

Despite careful checking, we cannot guarantee the accuracy of all information included on this site, and we accept no liability.