RD
Non-return valve, connector

Properties

Connection 1 + 2	metric cylindrical outer thread
Sealing form 1 + 2	24° inner cone
Design	Non-return valve, connector
Standard	DIN 3865
Scope of supply	Socket with union nut and cutting ring
Material	Steel
Surface	electro galvanised



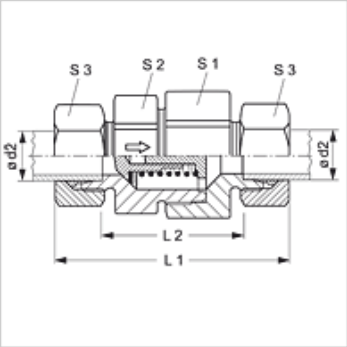

Note

Information about fitting, installation, pressure loads and permissible operating temperatures can be found in the technical information for pipe fittings.

Ordering information

Also available with opening pressure of 0.2; 0.5; 2; 3; 5 bar.

Item

Identification	Opening pressure	Series	Operating pressure	Ø d2 (mm)	L1 (mm)	L2 (mm)	S1	S2	S3
RD NW 04 HL	approx. 1 bar	L	PN 250	6	58,0	29,0	19	17	14
RD NW 06 HL	approx. 1 bar	L	PN 250	8	59,0	30,0	24	22	17
RD NW 08 HL	approx. 1 bar	L	PN 250	10	69,5	40,5	27	24	19
RD NW 10 HL	approx. 1 bar	L	PN 250	12	72,5	43,5	30	27	22
RD NW 13 HL	approx. 1 bar	L	PN 250	15	77,5	47,5	36	32	27
RD NW 16 HL	approx. 1 bar	L	PN 160	18	83,5	51,5	41	38	32
RD NW 20 HL	approx. 1 bar	L	PN 160	22	93,5	61,5	50	46	36
RD NW 25 HL	approx. 1 bar	L	PN 100	28	102,5	69,5	60	55	41
RD NW 32 HL	approx. 1 bar	L	PN 100	35	117,5	74,5	70	65	50
RD NW 40 HL	approx. 1 bar	L	PN 100	42	119,0	74,0	70	65	60
RD NW 03 HS	approx. 1 bar	S	PN 400	6	63,5	34,5	19	17	17
RD NW 04 HS	approx. 1 bar	S	PN 400	8	63,5	34,5	19	17	19
RD NW 06 HS	approx. 1 bar	S	PN 400	10	72,5	40,5	24	22	22
RD NW 08 HS	approx. 1 bar	S	PN 400	12	74,5	42,5	27	24	24
RD NW 10 HS	approx. 1 bar	S	PN 315	14	82,5	47,5	32	27	27
RD NW 13 HS	approx. 1 bar	S	PN 315	16	86,5	50,5	36	32	30
RD NW 16 HS	approx. 1 bar	S	PN 250	20	97,5	54,5	41	38	36
RD NW 20 HS	approx. 1 bar	S	PN 250	25	106,5	58,5	50	46	46
RD NW 25 HS	approx. 1 bar	S	PN 250	30	122,5	69,5	60	55	50
RD NW 32 HS	approx. 1 bar	S	PN 250	38	136,5	75,5	70	65	60

PN = Nominal pressure PB = Max. operating pressure – Series: LL = Very light L = Light S = Heavy – Ø = External pipe diameter

Product versions

RD VA	Non-return valve, connector, Stainless steel
XRD	Non-return valve, connector, Steel

Accessories

RD FEDER	Spring for non-return valve
RD FEDER PT	Spring for non-return valve

Despite careful checking, we cannot guarantee the accuracy of all information included on this site, and we accept no liability.