RD HJ

Non-return valve, connector

Properties

Connection 1 + 2	UN/UNF external threads
Sealing form 1 + 2	74° outer cone
Design	Non-return valve, connector
Material	Steel
Surface	electro galvanised



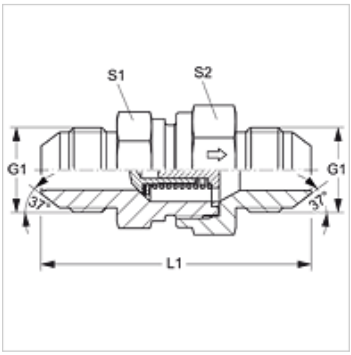

Ordering information

Also available with opening pressure of 0.2; 0.5; 2; 3; 5; 6 bar

Item

Identification	Opening pressure	Operating pressure	G1	L1 (mm)	S1	S2
RD 04 HJ	approx. 1 bar	PN 350	7/16"-20 UNF	52,5	19	19
RD 06 HJ	approx. 1 bar	PN 350	9/16"-18 UNF	61,5	24	27
RD 08 HJ	approx. 1 bar	PN 315	3/4"-16 UNF	69,5	27	32
RD 10 HJ	approx. 1 bar	PN 315	7/8" -14 UNF	78,5	32	36
RD 12 HJ	approx. 1 bar	PN 250	1.1/16" -12 UN	87,5	41	46
RD 16 HJ	approx. 1 bar	PN 250	1.5/16" -12 UN	92,5	46	50
RD 20 HJ	approx. 1 bar	PN 250	1.5/8" -12 UN	105,5	60	60
RD 24 HJ	approx. 1 bar	PN 140	1.7/8" -12 UN	118,5	65	70

PN = Nominal pressure PB = Max. operating pressure – SW, S1, S2 = With across flats

Despite careful checking, we cannot guarantee the accuracy of all information included on this site, and we accept no liability.