RD IN VA

Non-return valve, connector

Properties

Connection 1	NPT internal thread
Sealing form 1	thread seal
Connection 2	NPT internal thread
Sealing form 2	thread seal
Design	Non-return valve, connector
Construction	straight
Material	Stainless steel



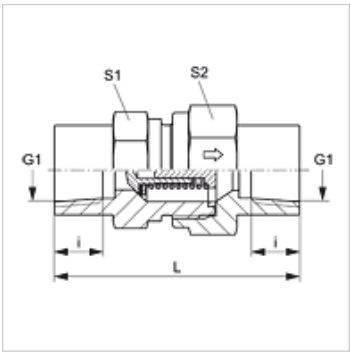

Ordering information

Also available with opening pressure of 0.2; 0.5; 2; 3 bar

Item

Identification	Opening pressure	Operating pressure	G1	i (mm)	L (mm)	S1	S2
RD NW 04 IN VA	approx. 1 bar	PN 400	1/8" -27 NPT	11,6	-	17	17
RD NW 06 IN VA	approx. 1 bar	PN 400	1/4" -18 NPT	16,4	57,5	19	19
RD NW 10 IN VA	approx. 1 bar	PN 400	3/8" -18 NPT	17,4	63,5	24	27
RD NW 13 IN VA	approx. 1 bar	PN 400	1/2" -14 NPT	22,6	78,0	32	36
RD NW 20 IN VA	approx. 1 bar	PN 400	3/4" -14 NPT	23,1	84,5	41	46
RD NW 25 IN VA	approx. 1 bar	PN 400	1" -11.5 NPT	27,8	101,0	46	50
RD NW 32 IN VA	approx. 1 bar	PN 250	1.1/4" -11.5 NPT	28,3	-	55	60
RD NW 40 IN VA	approx. 1 bar	PN 250	1.1/2" -11.5 NPT	28,3	-	65	70

SW, S1, S2 = With across flats

Despite careful checking, we cannot guarantee the accuracy of all information included on this site, and we accept no liability.