RD IR

Non-return valve, connector

Properties

Connection 1 + 2	BSP cylindrical internal threads
Sealing form 1 + 2	Shape A
Design	Non-return valve, connector
Construction	straight
Material	Steel
Surface	electro galvanised



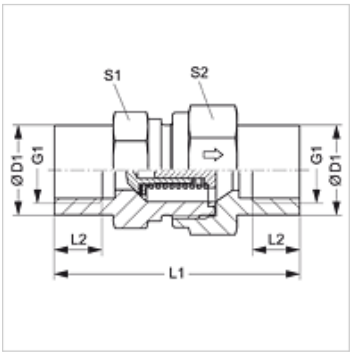

Item

Identification	Opening pressure	Operating pressure	G1	Ø D1 (mm)	L1 (mm)	L2 (mm)	S1	S2
RD NW 04 IR	approx. 1 bar	PN 400	G 1/8" -28	19,0	42,5	8,0	19	19
RD NW 06 IR	approx. 1 bar	PN 400	G 1/4" -19	19,0	51,0	12,0	19	19
RD NW 10 IR	approx. 1 bar	PN 400	G 3/8" -19	24,0	60,0	12,0	24	27
RD NW 13 IR	approx. 1 bar	PN 315	G 1/2" -14	32,0	72,0	15,0	32	36
RD NW 20 IR	approx. 1 bar	PN 250	G 3/4" -14	41,0	84,0	16,5	41	46
RD NW 25 IR	approx. 1 bar	PN 250	G 1" -11	46,0	95,0	19,0	46	50
RD NW 32 IR	approx. 1 bar	PN 250	G 1.1/4" -11	60,0	110,0	21,5	60	60
RD NW 40 IR	approx. 1 bar	PN 250	G 1.1/2" -11	65,0	114,0	22,0	65	70

PN = Nominal pressure PB = Max. operating pressure – SW, S1, S2 = With across flats

Product versions

RD IR VA	Non-return valve, connector, Stainless steel

Despite careful checking, we cannot guarantee the accuracy of all information included on this site, and we accept no liability.