XHVR ED VA

Non-return valve, screw-in connection

Properties

Connection 1	BSP external thread, cylindrical
Sealing form 1	Shape E
Connection 2	metric cylindrical outer thread
Sealing form 2	24° inner cone
Design	Non-return valve, screw-in connection
Construction	straight
Standard	DIN 3865
Scope of supply	Socket (without union nut and cutting ring)
Material	Stainless steel



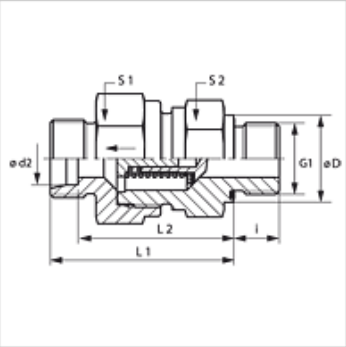

Note

Information about fitting, installation, pressure loads and permissible operating temperatures can be found in the technical information for pipe fittings.

Description

Direction of flow from screw-in pin

Ordering information

Seals of NBR
FPM (Viton) on request
Also available with opening pressure of 0.2; 0.5; 2; 3 bar

Item

Identification	Opening pressure	Series	Operating pressure	Ø d2 (mm)	G1	Ø D (mm)	i (mm)	L1 (mm)	L2 (mm)	S1	S2
XHVR NW 04 HL ED VA	approx. 1 bar	L	PN 250	6	G 1/8" -28	14	8	35,0	28,0	17	17
XHVR NW 06 HL ED VA	approx. 1 bar	L	PN 250	8	G 1/4" -19	19	12	37,0	30,0	19	19
XHVR NW 08 HL ED VA	approx. 1 bar	L	PN 250	10	G 1/4" -19	19	12	45,5	38,5	22	24
XHVR NW 10 HL ED VA	approx. 1 bar	L	PN 250	12	G 3/8" -19	22	12	49,5	42,5	30	27
XHVR NW 13 HL ED VA	approx. 1 bar	L	PN 250	15	G 1/2" -14	27	14	52,5	45,5	32	27
XHVR NW 16 HL ED VA	approx. 1 bar	L	PN 160	18	G 1/2" -14	27	14	57,5	50,0	36	36
XHVR NW 20 HL ED VA	approx. 1 bar	L	PN 160	22	G 3/4" -14	32	16	62,5	55,0	46	41
XHVR NW 25 HL ED VA	approx. 1 bar	L	PN 100	28	G 1" -11	40	18	70,5	63,0	55	50
XHVR NW 32 HL ED VA	approx. 1 bar	L	PN 100	35	G 1.1/4" -11	50	20	79,5	69,0	60	60
XHVR NW 40 HL ED VA	approx. 1 bar	L	PN 100	42	G 1.1/2" -11	55	22	79,5	68,5	70	65
XHVR NW 03 HS ED VA	approx. 1 bar	S	PN 400	6	G 1/4" -19	19	12	38,5	31,5	19	19
XHVR NW 04 HS ED VA	approx. 1 bar	S	PN 400	8	G 1/4" -19	19	12	38,5	31,5	19	19
XHVR NW 06 HS ED VA	approx. 1 bar	S	PN 400	10	G 3/8" -19	22	12	45,5	38,0	24	22
XHVR NW 08 HS ED VA	approx. 1 bar	S	PN 400	12	G 3/8" -19	22	12	48,5	41,0	27	24
XHVR NW 10 HS ED VA	approx. 1 bar	S	PN 315	14	G 1/2" -14	27	14	52,5	44,5	32	27
XHVR NW 13 HS ED VA	approx. 1 bar	S	PN 315	16	G 1/2" -14	27	14	56,5	48,0	36	32
XHVR NW 16 HS ED VA	approx. 1 bar	S	PN 250	20	G 3/4" -14	32	16	62,5	52,0	46	41
XHVR NW 20 HS ED VA	approx. 1 bar	S	PN 250	25	G 1" -11	40	18	66,5	54,5	50	46
XHVR NW 25 HS ED VA	approx. 1 bar	S	PN 250	30	G 1.1/4" -11	50	20	77,5	64,0	60	60
XHVR NW 32 HS ED VA	approx. 1 bar	S	PN 250	38	G 1.1/2" -11	55	22	85,5	69,5	70	65

Series: LL = Very light L = Light S = Heavy – PN = Nominal pressure PB = Max. operating pressure – Ø d2 = External pipe diameter

Product versions

XHVR ED	Non-return valve, screw-in connection, Steel
HVR ED VA	Non-return valve, screw-in connection, Stainless steel

Spare parts

WD V	Soft seal for ED fittings

Despite careful checking, we cannot guarantee the accuracy of all information included on this site, and we accept no liability.