XHZM ED

Non-return valve, screw-in connection

Properties

Connection 1	metric cylindrical outer thread
Sealing form 1	Shape E
Connection 2	metric cylindrical outer thread
Sealing form 2	24° inner cone
Design	Non-return valve, screw-in connection
Standard	DIN 3865
Scope of supply	Socket (without union nut and cutting ring)
Material	Steel
Surface	electro galvanised



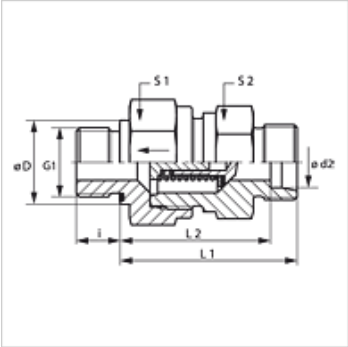

Note

Information about fitting, installation, pressure loads and permissible operating temperatures can be found in the technical information for pipe fittings.

Description

Direction of flow to screw-in pin

Ordering information

Also available with opening pressure of 0.2; 0.5; 2; 3; 5 bar.

Item

Identification	Opening pressure	Series	Operating pressure	Ø d2 (mm)	G1	Ø D (mm)	i (mm)	L1 (mm)	L2 (mm)	S1	S2
XHZM NW 04 HL ED	approx. 1 bar	L	PN 250	6	M 10 x 1	14	8	33,5	26,5	17	17
XHZM NW 06 HL ED	approx. 1 bar	L	PN 250	8	M 12 x 1.5	-	12	33,5	28,5	19	19
XHZM NW 08 HL ED	approx. 1 bar	L	PN 250	10	M 14 x 1.5	-	12	45,5	38,5	24	22
XHZM NW 10 HL ED	approx. 1 bar	L	PN 250	12	M 16 x 1.5	-	12	47,5	40,5	30	27
XHZM NW 13 HL ED	approx. 1 bar	L	PN 250	15	M 18 x 1.5	-	12	49,5	42,5	32	27
XHZM NW 16 HL ED	approx. 1 bar	L	PN 160	18	M 22 x 1.5	-	14	55,5	48,0	36	36
XHZM NW 20 HL ED	approx. 1 bar	L	PN 160	22	M 26 x 1.5	-	16	63,5	56,0	46	41
XHZM NW 25 HL ED	approx. 1 bar	L	PN 100	28	M 33 x 2	-	18	71,5	64,0	55	50
XHZM NW 32 HL ED	approx. 1 bar	L	PN 100	35	M 42 x 2	-	20	80,5	70,0	60	60
XHZM NW 40 HL ED	approx. 1 bar	L	PN 100	42	M 48 x 2	-	22	81,5	70,5	70	65
XHZM NW 03 HS ED	approx. 1 bar	S	PN 400	6	M 12 x 1.5	-	12	38,5	31,5	19	19
XHZM NW 04 HS ED	approx. 1 bar	S	PN 400	8	M 14 x 1.5	-	12	38,5	31,5	19	19
XHZM NW 06 HS ED	approx. 1 bar	S	PN 400	10	M 16 x 1.5	-	12	45,5	38,0	24	22
XHZM NW 08 HS ED	approx. 1 bar	S	PN 400	12	M 18 x 1.5	-	12	48,5	41,0	27	24
XHZM NW 10 HS ED	approx. 1 bar	S	PN 315	14	M 20 x 1.5	-	14	51,5	43,5	32	27
XHZM NW 13 HS ED	approx. 1 bar	S	PN 315	16	M 22 x 1.5	-	14	54,5	46,0	36	32
XHZM NW 16 HS ED	approx. 1 bar	S	PN 250	20	M 27 x 2	-	16	60,5	50,0	46	41
XHZM NW 20 HS ED	approx. 1 bar	S	PN 250	25	M 33 x 2	-	18	66,5	54,5	50	46
XHZM NW 25 HS ED	approx. 1 bar	S	PN 250	30	M 42 x 2	-	20	77,5	64,0	60	60
XHZM NW 32 HS ED	approx. 1 bar	S	PN 250	38	M 48 x 2	-	22	87,5	71,5	70	65

Series: LL = Very light L = Light S = Heavy – PN = Nominal pressure PB = Max. operating pressure – Ø d2 = External pipe diameter

Product versions

XHZM ED VA	Non-return valve, screw-in connection, Stainless steel
HZM ED	Non-return valve, screw-in connection, Steel

Accessories

RD FEDER	Spring for non-return valve
RD FEDER PT	Spring for non-return valve

Spare parts

WD	Soft seal for ED fittings

Despite careful checking, we cannot guarantee the accuracy of all information included on this site, and we accept no liability.