XRD VA

Non-return valve, connector

Properties

Connection 1 + 2	metric cylindrical outer thread
Sealing form 1 + 2	24° inner cone
Design	Non-return valve, connector
Standard	DIN 3865
Scope of supply	Socket (without union nut and cutting ring)
Material	Stainless steel



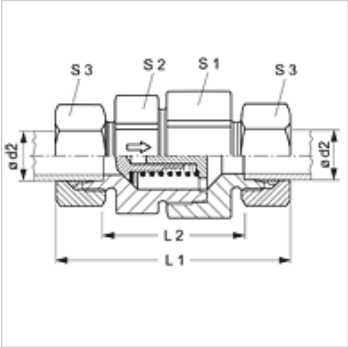

Note

Information about fitting, installation, pressure loads and permissible operating temperatures can be found in the technical information for pipe fittings.

Ordering information

Also available with opening pressure of 0.2; 0.5; 2; 3; 5 bar.

Item

Identification	Opening pressure	Series	Operating pressure	Ø d2 (mm)	L1 (mm)	L2 (mm)	S1	S2	S3
XRD NW 04 HL VA	approx. 1 bar	L	PN 250	6	58,0	29,0	19	17	14
XRD NW 06 HL VA	approx. 1 bar	L	PN 250	8	59,0	30,0	24	22	17
XRD NW 08 HL VA	approx. 1 bar	L	PN 250	10	69,5	40,5	27	24	19
XRD NW 10 HL VA	approx. 1 bar	L	PN 250	12	72,5	43,5	30	27	22
XRD NW 13 HL VA	approx. 1 bar	L	PN 250	15	77,5	47,5	36	32	27
XRD NW 16 HL VA	approx. 1 bar	L	PN 160	18	83,5	51,5	41	38	32
XRD NW 20 HL VA	approx. 1 bar	L	PN 160	22	93,5	61,5	50	46	36
XRD NW 25 HL VA	approx. 1 bar	L	PN 100	28	102,5	69,5	60	55	41
XRD NW 32 HL VA	approx. 1 bar	L	PN 100	35	117,5	74,5	70	65	50
XRD NW 40 HL VA	approx. 1 bar	L	PN 100	42	119,0	74,0	70	65	60
XRD NW 03 HS VA	approx. 1 bar	S	PN 400	6	63,5	34,5	19	17	17
XRD NW 04 HS VA	approx. 1 bar	S	PN 400	8	63,5	34,5	19	17	19
XRD NW 06 HS VA	approx. 1 bar	S	PN 400	10	72,5	40,5	24	22	22
XRD NW 08 HS VA	approx. 1 bar	S	PN 400	12	74,5	42,5	27	24	24
XRD NW 10 HS VA	approx. 1 bar	S	PN 315	14	82,5	47,5	32	27	27
XRD NW 13 HS VA	approx. 1 bar	S	PN 315	16	86,5	50,5	36	32	30
XRD NW 16 HS VA	approx. 1 bar	S	PN 250	20	97,5	54,5	41	38	36
XRD NW 20 HS VA	approx. 1 bar	S	PN 250	25	106,5	58,5	50	46	46
XRD NW 25 HS VA	approx. 1 bar	S	PN 250	30	122,5	69,5	60	55	50
XRD NW 32 HS VA	approx. 1 bar	S	PN 250	38	136,5	75,5	70	65	60

Ø = External pipe diameter – Series: LL = Very light L = Light S = Heavy – PN = Nominal pressure PB = Max. operating pressure

Product versions

XRD	Non-return valve, connector, Steel
RD VA	Non-return valve, connector, Stainless steel

Despite careful checking, we cannot guarantee the accuracy of all information included on this site, and we accept no liability.