AFG M (3000 PSI)

SAE external thread flange

HANSA FLEX

Properties

Pressure series	3000 psi
Standard	DIN 3901/3902
Construction	straight
Design	SAE external thread flange
Mounting	Screw bore hole
Scope of supply	flange only
Material	S355J2G3 (ST52.3)
Surface	black oiled

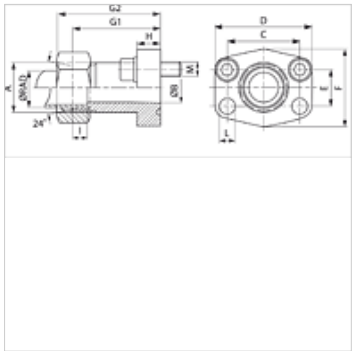

Note

In accordance with SAE J 518 C, the specified nominal pressure is defined by the flange or based on the pipe to be welded on.
Recommended screws are listed in the columns M (metr) and M (unc).

Item

Identification	Series	Ø RAD (mm)	PB 10.9 (bar)	Size	A	Ø B (mm)	C (mm)	E (mm)	G1 (mm)	I (mm)	L (mm)	M metr.	M unc
AFG 80 M/L15	L	15	315	1/2"	M22x1,5	12	38,1	17,5	52	7,0	9,0	M 8 x 30	5/16" x 1.1/4"
AFG 100 M/L22	L	22	160	3/4"	M30x2	19	47,6	22,2	60	7,5	11,5	M 10 x 30	3/8" x 1.1/4"
AFG 100 M/S20	S	20	345	3/4"	M30x2	16	47,6	22,2	60	10,5	11,5	M 10 x 30	3/8" x 1.1/4"
AFG 102 M/L22	L	22	160	1"	M30x2	19	52,4	26,2	63	7,5	11,5	M 10 x 30	3/8" x 1.1/4"
AFG 102 M/L28	L	28	160	1"	M36x2	24	52,4	26,2	63	7,5	11,5	M 10 x 30	3/8" x 1.1/4"
AFG 102 M/S20	S	20	315	1"	M30x2	16	52,4	26,2	63	10,5	11,5	M 10 x 30	3/8" x 1.1/4"
AFG 102 M/S25	S	25	315	1"	M36x2	20	52,4	26,2	63	12,0	11,5	M 10 x 30	3/8" x 1.1/4"
AFG 104 M/L28	L	28	160	1.1/4"	M36x2	24	58,7	30,2	65	7,5	11,5	M 10 x 35	7/16" x 1.1/2"
AFG 104 M/L35	L	35	160	1.1/4"	M45x2	29	58,7	30,2	65	10,5	11,5	M 10 x 35	7/16" x 1.1/2"
AFG 104 M/S30	S	30	250	1.1/4"	M42x2	25	58,7	30,2	65	13,5	11,5	M 10 x 35	7/16" x 1.1/2"
AFG 106 M/L42	L	42	160	1.1/2"	M52x2	36	69,9	35,7	70	11,0	13,5	M 12 x 35	1/2" x 1.1/2"
AFG 106 M/S38	S	38	200	1.1/2"	M52x2	32	69,9	35,7	70	16,0	13,5	M 12 x 35	1/2" x 1.1/2"

PN = Nominal pressure PB = Max. operating pressure – Ø = External pipe diameter – Series: LL = Very light L = Light S = Heavy

Product versions

AFG M M (3000 / 6000 PSI)	SAE external thread flange, with metric screw set and O-ring
AFG M U (3000 / 6000 PSI)	SAE external thread flange, with UNC screw set and O-ring

Despite careful checking, we cannot guarantee the accuracy of all information included on this site, and we accept no liability.