AFS SCHR M

Metric screw set, hexagon socket

Properties

Design	Screw set
Standard	DIN 912 (ISO 4762)
Scope of supply	4 screws + 4 lock washers
Material	Steel 10.9
Surface	black oiled



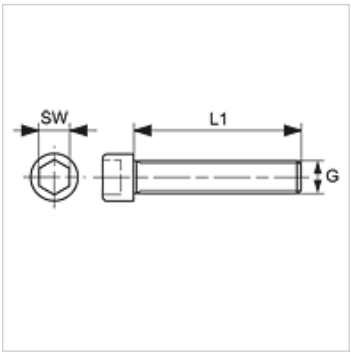

Item

Identification	G1	L1 (mm)	AF (mm)
AFS 80 SCHRM	M 8 x 1.25	30	6
AFS 100 SCHRM	M 10 x 1.5	35	8
AFS 104 SCHRM	M 10 x 1.5	40	8
AFS 106 SCHRM	M 12 x 1.75	45	10
AFS 112 SCHRM	M 16 x 2	50	14
AFS 404 SCHRM	M 14 x 2	45	12
AFS 406 SCHRM	M 20 x 2.5	70	17

AF = Width across flats

Accessory for following products

FH (3000 PSI)	SAE flange half
FH (6000 PSI)	SAE flange half
VF (3000 PSI)	SAE full flange
VF (6000 PSI)	SAE full flange

Despite careful checking, we cannot guarantee the accuracy of all information included on this site, and we accept no liability.