AFS SCHR U

UNC screw set, hexagon socket

HANSA-FLEX

Properties

Design	Screw set
Standard	ASA B 18.3
Scope of supply	4 screws + 4 lock washers
Material	Steel
Surface	black oiled



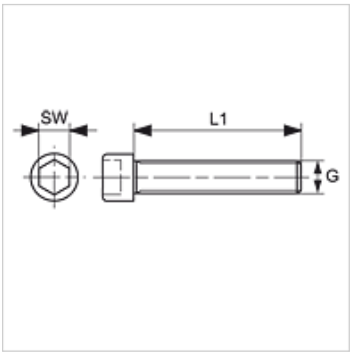

Item

Identification	G1	L1 (mm)	AF
AFS 80 SCHRU	5/16" x 1.1/4" UNC	31,8	7/32"
AFS 100 SCHRU	3/8" x 1.1/2" UNC	38,1	5/16"
AFS 104 SCHRU	7/16" x 1.1/2" UNC	38,1	5/16"
AFS 106 SCHRU	1/2" x 1.3/4" UNC	44,5	3/8"
AFS 112 SCHRU	5/8" x 2" UNC	50,8	1/2"
AFS 403 SCHRU	7/16" x 1.3/4" UNC	44,5	5/16"
AFS 406 SCHRU	3/4" x 2.1/2" UNC	63,5	9/16"

AF = Width across flats

Accessory for following products

FH (3000 PSI)	SAE flange half
FH (6000 PSI)	SAE flange half
VF (3000 PSI)	SAE full flange
VF (6000 PSI)	SAE full flange

Despite careful checking, we cannot guarantee the accuracy of all information included on this site, and we accept no liability.