AGL (3000 PSI / 6000 PSI)

SAE adapter flange with measuring connection

HANSA-FLEX

Properties

Standard	SAE J 518 C ISO 6162
Construction	straight
Design	SAE adapter flange with measuring connection
Mounting	Screw bore hole
Material	S355J2G3 (ST52.3)
Surface	black oiled

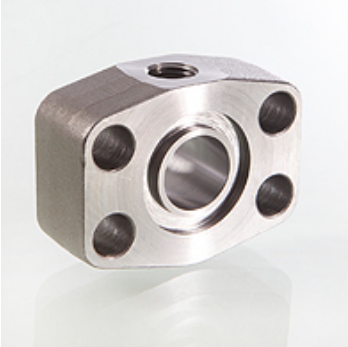

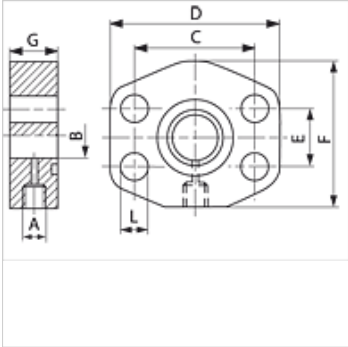

Note

The stated maximum working pressure relates to the flange. The actual working pressure is determined by the pipe (wall thickness) and the quality of the pipe.

Item

Identification	Pressure series	PB 10.9 (bar)	Size	A	G (mm)	Ø B (mm)	C (mm)	D (mm)	E (mm)	F (mm)	L (mm)
AGL 80	3000 PSI	350	1/2"	G 1/4" -19	24	12	38,1	55	17,5	38	9,0
AGL 100	3000 PSI	350	3/4"	G 1/4" -19	24	19	47,6	65	22,3	50	11,0
AGL 102	3000 PSI	315	1"	G 1/4" -19	24	24	52,4	70	26,2	50	11,0
AGL 104	3000 PSI	250	1.1/4"	G 1/4" -19	23	32	58,7	81	30,2	70	12,5
AGL 106	3000 PSI	200	1.1/2"	G 1/4" -19	24	38	69,9	95	35,7	78	13,5
AGL 108	3000 PSI	200	2"	G 1/4" -19	24	50	77,8	102	42,9	90	13,5
AGL 401	6000 PSI	400	1/2"	G 1/4" -19	24	12	40,5	55	18,2	38	9,0
AGL 402	6000 PSI	400	3/4"	G 1/4" -19	24	19	50,8	70	23,8	50	11,0
AGL 403	6000 PSI	400	1"	G 1/4" -19	23	24	57,2	81	27,8	70	13,0
AGL 404	6000 PSI	400	1.1/4"	G 1/4" -19	24	32	66,7	95	31,8	78	15,0
AGL 405	6000 PSI	400	1.1/2"	G 1/4" -19	24	38	79,4	112	36,5	94	17,0
AGL 406	6000 PSI	400	2"	G 1/4" -19	24	51	96,8	134	44,5	114	21,0

PN = Nominal pressure PB = Max. operating pressure

Despite careful checking, we cannot guarantee the accuracy of all information included on this site, and we accept no liability.