BL (6000 PSI)
SAE blind plate

HANSA-FLEX

Properties

Pressure series	6000 psi
Standard	SAE J 518 C ISO 6162
Construction	straight
Design	SAE blind plate
Scope of supply	blind plate only
Material	S355J2G3 (C22)
Surface	electro galvanised

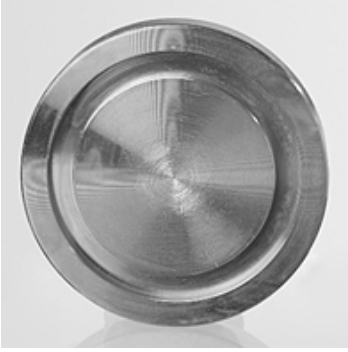

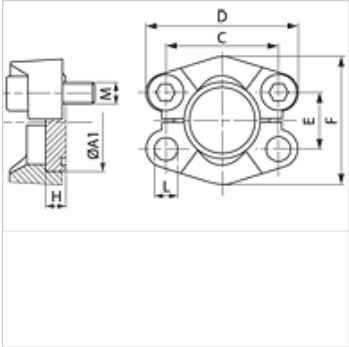

Item

Identification	PB 10.9 (bar)	Size	A1 (mm)	G (mm)	C (mm)	D (mm)	E (mm)	F (mm)	H (mm)	L (mm)	M metr.	M unc
BL 6001	250	1/2"	31,8	14	40,5	56	18,2	48	7,8	8,7	M 8 x 30	5/16" x 1.1/4"
BL 6002	250	3/4"	41,3	15	50,8	71	23,8	60	8,8	10,5	M 10 x 35	3/8" x 1.1/2"
BL 6003	250	1"	47,6	16	57,2	81	27,8	70	9,5	*1	M 12 x 45	7/16" x 1.3/4"
BL 6004	250	1.1/4"	54,0	16	66,6	95	31,8	78	10,4	*2	M 14 x 45	1/2" x 1.3/4"
BL 6005	250	1.1/2"	63,5	19	79,3	113	36,5	95	12,6	17,0	M 16 x 55	5/8" x 2"
BL 6006	250	2"	79,4	30	96,8	133	44,5	114	12,6	21,0	M 20 x 70	3/4" x 2.1/2"

PN = Nominal pressure PB = Max. operating pressure

*1) = Choice of 12.0 or 12.5 – *2) = Choice of 13.5 or 14.75

Despite careful checking, we cannot guarantee the accuracy of all information included on this site, and we accept no liability.