FEDERRING
Lock washer

HANSA-FLEX

Properties

Design	Lock washer
Standard	DIN 127 Shape B
Material	Spring steel



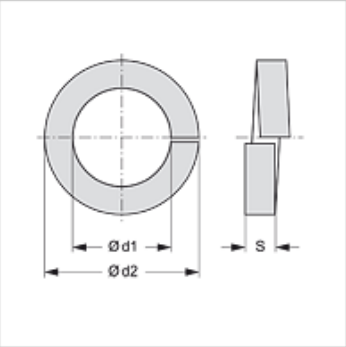

Item

Identification	Ø d1 (mm)	Ø d2 (mm)	S (mm)
FEDERRING M8	8,1	14,8	2,0
FEDERRING M10	10,2	18,1	2,2
FEDERRING M12	12,2	21,1	2,5
FEDERRING M14	14,2	24,1	3,0
FEDERRING M16	16,2	27,4	3,5
FEDERRING M20	20,2	33,6	4,0

Despite careful checking, we cannot guarantee the accuracy of all information included on this site, and we accept no liability.