G VKS ST 250

Cetop square flange, short stub end

HANSA-FLEX

Properties

Design	Cetop square flange
Construction	straight
Standard	CETOP RP 63H ISO 6164
Material	S355J2G3 (ST52.3)
Surface	black oiled

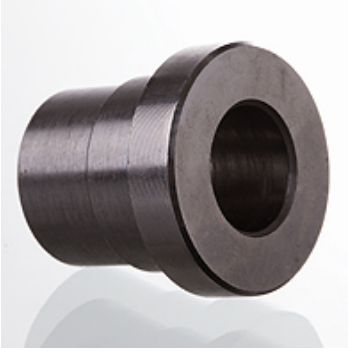

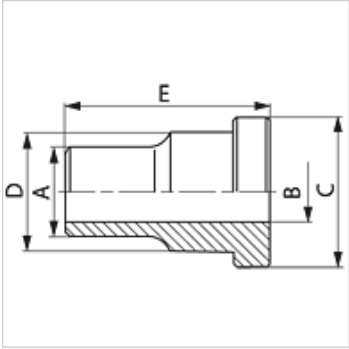

Item

Identification	Pressure PB (bar)	Size	A (mm)	Ø B (mm)	C (mm)	D (mm)	E (mm)
G VKS 38 ST 250	250	3/8"	18	12,5	24,5	18,0	30
G VKS 12 ST 250	250	1/2"	22	15,0	30,2	24,0	30
G VKS 34 ST 250	250	3/4"	28	20,0	38,1	31,5	35
G VKS 1 ST 250	250	1"	35	25,0	44,4	38,0	40
G VKS 114 ST 250	250	1.1/4"	43	32,0	50,8	43,0	45
G VKS 112 ST 250	250	1.1/2"	50	38,0	60,3	50,0	50
G VKS 2 ST 250	250	2"	62	47,0	71,4	62,0	60
G VKS 212 ST 250	250	2.1/2"	76	58,0	87,2	76,0	70
G VKS 3 ST 250	250	3"	90	70,0	101,6	90,0	80
G VKS 312 ST 250	250	3.1/2"	102	80,0	119,0	102,0	90
G VKS 4 ST 250	250	4"	114	90,0	131,0	114,0	105

PN = Nominal pressure PB = Max. operating pressure – Series: LL = Very light L = Light S = Heavy

Despite careful checking, we cannot guarantee the accuracy of all information included on this site, and we accept no liability.