G VKS ST 400

Cetop square flange, short stub end

HANSA-FLEX

Properties

Design	Cetop square flange
Construction	straight
Standard	CETOP RP 63H ISO 6164
Material	S355J2G3 (ST52.3)
Surface	black oiled



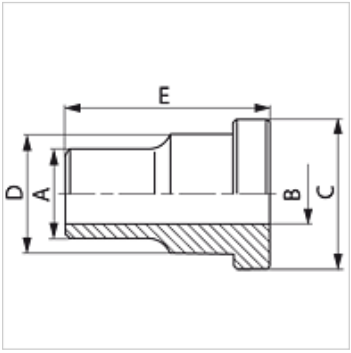

Item

Identification	Pressure PB (bar)	Size	A (mm)	Ø B (mm)	C (mm)	D (mm)	E (mm)
G VKS 38 ST 400	400	3/8"	18	11,0	26,0	18	35
G VKS 12 ST 400	400	1/2"	22	14,0	31,8	24	40
G VKS 34 ST 400	400	3/4"	28	18,0	39,5	32	45
G VKS 1 ST 400	400	1"	35	22,0	47,6	38	50
G VKS 114 ST 400	400	1.1/4"	44	29,0	54,0	44	55
G VKS 112 ST 400	400	1.1/2"	51	35,0	63,5	51	60
G VKS 2 ST 400	400	2"	61	43,0	79,4	67	70
G VKS 212 ST 400	400	2.1/2"	80	53,0	94,2	60	80
G VKS 3 ST 400	400	3"	90	58,0	104,0	90	90
G VKS 312 ST 400	400	3.1/2"	102	63,0	119,0	102	90
G VKS 4 ST 400	400	4"	114	74,0	131,0	114	105

Series: LL = Very light L = Light S = Heavy – PN = Nominal pressure PB = Max. operating pressure

Despite careful checking, we cannot guarantee the accuracy of all information included on this site, and we accept no liability.