WF LK 3 M

Pump connection (3 hole), angle 90°

Properties

Design	Pump connection (3 hole)
Construction	Angle 90°
Mounting	with metric screw set
Scope of supply	with screw set, O-ring, nut and cutting ring
Material	Malleable cast iron GTW 40
Surface	electro galvanised



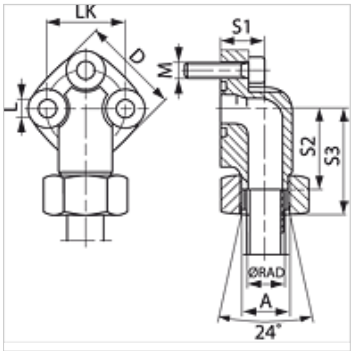

Item

Identification	Series	Ø RAD (mm)	Pressure PB (bar)	LK (mm)	A	D (mm)	S1 (mm)	S2 (mm)	S3 (mm)	L (mm)	Screws	OR
WF 30 LK L 12-3 M	L	12	250	30	M18x1,5	38	19	30,0	46,5	6,4	(3 x) M 6 x 25	16.0 x 2.5
WF 30 LK L 15-3 M	L	15	250	30	M22x1,5	38	19	30,0	46,0	6,4	(3 x) M 6 x 25	16.0 x 2.5
WF 40 LK L 22-3 M	L	22	160	40	M30x2	48	25	35,5	52,5	8,4	(3 x) M 8 x 30	24.0 x 2.5
WF 40 LK L 28-3 M	L	28	160	40	M36x2	48	25	35,5	52,5	8,4	(3 x) M 8 x 30	24.0 x 2.5

Series: LL = Very light L = Light S = Heavy – PN = Nominal pressure PB = Max. operating pressure – Ø RAD = External pipe diameter

Product versions

WF LK 3 Pump connection (3 hole), angle 90°, with metric screw set and O-ring

Despite careful checking, we cannot guarantee the accuracy of all information included on this site, and we accept no liability.