FHR 90

Blanking screw with hexagon socket

HANSA-FLEX

Properties

Connection 1	BSP external thread, cylindrical
Sealing form 1	Shape A
Design	Blanking screw with hexagon socket
Construction	straight
Standard	DIN 908
Material	Steel
Surface	electro galvanised



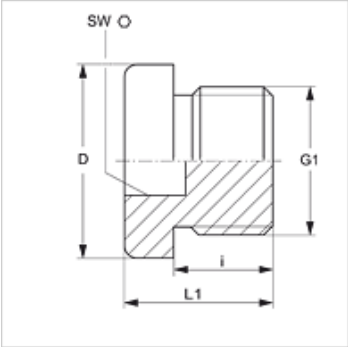

Item

Identification	G1	D (mm)	i (mm)	L1 (mm)	AF (mm)
FHR 90-1/8	G 1/8" -28	14	8	11	5
FHR 90-1/4	G 1/4" -19	18	12	15	6
FHR 90-3/8	G 3/8" -19	22	12	15	8
FHR 90-1/2	G 1/2" -14	26	14	18	10
FHR 90-5/8	G 5/8" -14	28	14	18	12
FHR 90-3/4	G 3/4" -14	32	16	20	12
FHR 90-1	G 1" -11	39	16	21	17
FHR 90-1 1/4	G 1.1/4" -11	49	16	21	22
FHR 90-1 1/2	G 1.1/2" -11	55	16	21	24
FHR 90-2	G 2" -11	68	20	25	32

PN = Nominal pressure PB = Max. operating pressure

Despite careful checking, we cannot guarantee the accuracy of all information included on this site, and we accept no liability.