# VHM 90 ED VA

Blanking screw with hexagon socket

## Properties

| | |
|---|---|
| **Connection 1** | metric cylindrical outer thread |
| **Sealing form 1** | Shape E |
| **Design** | Blanking screw with hexagon socket |
| **Construction** | straight |
| **Material** | Stainless steel |



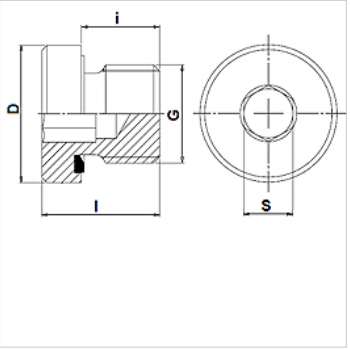


## Ordering information

Seals of NBR

FPM (Viton) on request

## Item

| Identification | Operating pressure | G | D (mm) | i (mm) | l (mm) | S (mm) |
|---|---|---|---|---|---|---|
| **VHM 90-10 ED VA** | PN 400 | M 10 x 1 | 14,0 | 8 | 12,0 | 5 |
| **VHM 90-12 ED VA** | PN 400 | M 12 x 1.5 | 17,0 | 12 | 16,0 | 6 |
| **VHM 90-14 ED VA** | PN 400 | M 14 x 1.5 | 19,0 | 12 | 16,0 | 6 |
| **VHM 90-16 ED VA** | PN 400 | M 16 x 1.5 | 22,0 | 12 | 16,0 | 8 |
| **VHM 90-18 ED VA** | PN 400 | M 18 x 1.5 | 24,0 | 12 | 17,0 | 8 |
| **VHM 90-20 ED VA** | PN 400 | M 20 x 1.5 | 26,0 | 14 | 19,0 | 10 |
| **VHM 90-22 ED VA** | PN 400 | M 22 x 1.5 | 27,0 | 14 | 19,0 | 10 |
| **VHM 90-26 ED VA** | PN 400 | M 26 x 1.5 | 32,0 | 16 | 21,0 | 12 |
| **VHM 90-27 ED VA** | PN 400 | M 27 x 2 | 32,0 | 16 | 21,0 | 12 |
| **VHM 90-33 ED VA** | PN 400 | M 33 x 2 | 40,0 | 16 | 22,5 | 17 |
| **VHM 90-42 ED VA** | PN 315 | M 42 x 2 | 50,0 | 16 | 22,5 | 22 |
| **VHM 90-48 ED VA** | PN 315 | M 48 x 2 | 55,0 | 16 | 22,5 | 24 |

PN = Nominal pressure  PB = Max. operating pressure

## Product versions

| | |
|---|---|
| **VHM 90 ED** | Blanking screw with hexagon socket, Steel |

## Spare parts

| | |
|---|---|
| **WD V** | Soft seal for ED fittings |

*Despite careful checking, we cannot guarantee the accuracy of all information included on this site, and we accept no liability.*