VHR 90 ED

Blanking screw with hexagon socket

Properties

Connection 1	BSP external thread, cylindrical
Sealing form 1	Shape E
Design	Blanking screw with hexagon socket
Construction	straight
Material	Steel
Surface	electro galvanised



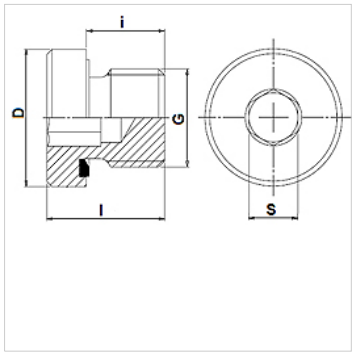

Note

Also available without seal as FHR.

Item

Identification	Operating pressure	G	D (mm)	i (mm)	l (mm)	S (mm)
VHR 90-1/8 ED	PN 400	G 1/8" -28	14	8	12,0	5
VHR 90-1/4 ED	PN 400	G 1/4" -19	19	12	17,0	6
VHR 90-3/8 ED	PN 400	G 3/8" -19	22	12	17,0	8
VHR 90-1/2 ED	PN 400	G 1/2" -14	27	14	19,0	10
VHR 90-3/4 ED	PN 400	G 3/4" -14	32	16	21,0	12
VHR 90-1 ED	PN 400	G 1" -11	40	16	22,5	17
VHR 90-1 1/4 ED	PN 315	G 1.1/4" -11	50	16	22,5	22
VHR 90-1 1/2 ED	PN 315	G 1.1/2" -11	55	16	22,5	24
VHR 90-2 ED	PN 315	G 2" -11	72	24	34,5	32

PN = Nominal pressure PB = Max. operating pressure

Product versions

VHR 90 ED VA	Blanking screw with hexagon socket, Stainless steel

Spare parts

WD	Soft seal for ED fittings

Despite careful checking, we cannot guarantee the accuracy of all information included on this site, and we accept no liability.