VLM / VSM
Blanking nut

HANSA-FLEX

Properties

Connection 1	metric nut thread
Sealing form 1	24° outer cone with O-ring
Design	Blanking nut
Construction	straight
Standard	DIN 2353 ISO 8434-1
Material	Steel
Surface	electro galvanised



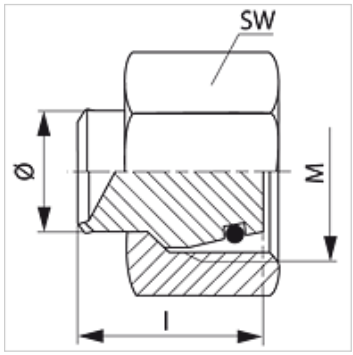

Note

Information about fitting, installation, pressure loads and permissible operating temperatures can be found in the technical information for pipe fittings.

Item

Identification	Series	Operating pressure	External pipe Ø (mm)	M	l (mm)	AF (mm)	OR
VLM NW 04	L	PN 400	6	M 12 x 1.5	18,5	14	4.0 x 1.5
VLM NW 06	L	PN 400	8	M 14 x 1.5	18,0	17	6.0 x 1.5
VLM NW 08	L	PN 400	10	M 16 x 1.5	19,5	19	7.5 x 1.5
VLM NW 10	L	PN 400	12	M 18 x 1.5	19,0	22	9.0 x 1.5
VLM NW 13	L	PN 400	15	M 22 x 1.5	19,0	27	12.0 x 2.0
VLM NW 16	L	PN 315	18	M 26 x 1.5	22,0	32	15.0 x 2.0
VLM NW 20	L	PN 315	22	M 30 x 2	22,0	36	20.0 x 2.0
VLM NW 25	L	PN 250	28	M 36 x 2	23,5	41	26.0 x 2.0
VLM NW 32	L	PN 250	35	M 45 x 2	27,0	50	32.0 x 2.5
VLM NW 40	L	PN 250	42	M 52 x 2	27,5	60	38.0 x 2.5
VSM NW 03	S	PN 630	6	M 14 x 1.5	18,5	17	4.0 x 1.5
VSM NW 04	S	PN 630	8	M 16 x 1.5	18,0	19	6.0 x 1.5
VSM NW 06	S	PN 630	10	M 18 x 1.5	19,5	22	7.5 x 1.5
VSM NW 08	S	PN 630	12	M 20 x 1.5	19,0	24	9.0 x 1.5
VSM NW 10	S	PN 630	14	M 22 x 1.5	21,0	27	10.0 x 2.0
VSM NW 13	S	PN 400	16	M 24 x 1.5	22,0	30	12.0 x 2.0
VSM NW 16	S	PN 400	20	M 30 x 2	26,5	36	16.0 x 2.5
VSM NW 20	S	PN 400	25	M 36 x 2	27,5	46	20.0 x 2.5
VSM NW 25	S	PN 400	30	M 42 x 2	28,5	50	25.0 x 2.5
VSM NW 32	S	PN 315	38	M 52 x 2	32,5	60	33.0 x 2.5

PN = Nominal pressure PB = Max. operating pressure – Series: LL = Very light L = Light S = Heavy – Ø = External pipe diameter

Product versions

VLM VA / VSM VA	Blanking nut, Stainless steel

Despite careful checking, we cannot guarantee the accuracy of all information included on this site, and we accept no liability.