# EWOM 45
Screw-in fitting, angle 45°

HANSA-FLEX

## Properties

| | |
|---|---|
| **Connection 1** | metric cylindrical outer thread |
| **Sealing form 1** | Shape F |
| **Connection 2** | metric cylindrical outer thread |
| **Sealing form 2** | 24° inner cone |
| **Design** | Adjustable direction screw-in fitting |
| **Construction** | Angle 45° |
| **Scope of supply** | Socket with union nut and cutting ring |
| **Material** | Steel |
| **Surface** | electro galvanised |



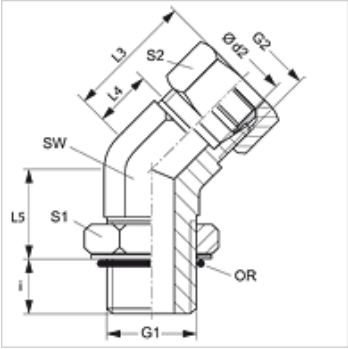


## Note

Information about fitting, installation, pressure loads and permissible operating temperatures can be found in the technical information for pipe fittings.

## Item

| Identification | Series | Operating pressure | Ø d2 (mm) | G1 | G2 | i (mm) | L3 (mm) | L4 (mm) | L5 (mm) | AF (mm) | S1 | S2 | OR |
|---|---|---|---|---|---|---|---|---|---|---|---|---|---|
| **EWOM 45 NW 04 HL** | L | PN 315 | 6 | M 10 x 1 | M 12 x 1.5 | 8 | 24 | 9 | 20 | 14 | 14 | 14 | 8.1 x 1.6 |
| **EWOM 45 NW 06 HL** | L | PN 315 | 8 | M 12 x 1.5 | M 14 x 1.5 | 11 | 27 | 12 | 18 | 14 | 17 | 17 | 9.3 x 2.4 |
| **EWOM 45 NW 08 HL** | L | PN 315 | 10 | M 14 x 1.5 | M 16 x 1.5 | 11 | 27 | 12 | 22 | 19 | 19 | 19 | 11.3 x 2.4 |
| **EWOM 45 NW 10 HL** | L | PN 315 | 12 | M 16 x 1.5 | M 18 x 1.5 | 11 | 28 | 14 | 23 | 19 | 22 | 22 | 13.3 x 2.4 |
| **EWOM 45 NW 13 HL** | L | PN 315 | 15 | M 18 x 1.5 | M 22 x 1.5 | 12 | 32 | 17 | 23 | 22 | 24 | 27 | 15.3 x 2.4 |
| **EWOM 45 NW 16 HL** | L | PN 315 | 18 | M 22 x 1.5 | M 26 x 1.5 | 12 | 33 | 17 | 30 | 27 | 27 | 32 | 19.3 x 2.4 |
| **EWOM 45 NW 20 HL 27** | L | PN 160 | 22 | M 27 x 2 | M 30 x 2 | 15 | 35 | 19 | 30 | 30 | 32 | 36 | 23.6 x 2.9 |
| **EWOM 45 NW 25 HL** | L | PN 160 | 28 | M 33 x 2 | M 36 x 2 | 15 | 40 | 23 | 34 | 36 | 41 | 41 | 29.5 x 3.0 |
| **EWOM 45 NW 32 HL** | L | PN 160 | 35 | M 42 x 2 | M 45 x 2 | 15 | 48 | 27 | 36 | 50 | 50 | 50 | 38.0 x 3.0 |
| **EWOM 45 NW 40 HL** | L | PN 160 | 42 | M 48 x 2 | M 52 x 2 | 17 | 49 | 26 | 36 | 50 | 55 | 60 | 44.5 x 3.0 |
| | | | | | | | | | | | | | |
| **EWOM 45 NW 03 HS** | S | PN 400 | 6 | M 12 x 1.5 | M 14 x 1.5 | 11 | 24 | 9 | 18 | 14 | 17 | 17 | 9.3 x 2.4 |
| **EWOM 45 NW 04 HS** | S | PN 400 | 8 | M 14 x 1.5 | M 16 x 1.5 | 11 | 27 | 12 | 18 | 19 | 19 | 19 | 11.3 x 2.4 |
| **EWOM 45 NW 06 HS** | S | PN 400 | 10 | M 16 x 1.5 | M 18 x 1.5 | 12 | 29 | 13 | 22 | 19 | 22 | 22 | 13.3 x 2.4 |
| **EWOM 45 NW 08 HS** | S | PN 400 | 12 | M 18 x 1.5 | M 20 x 1.5 | 14 | 33 | 17 | 23 | 22 | 24 | 24 | 15.3 x 2.4 |
| **EWOM 45 NW 13 HS** | S | PN 400 | 16 | M 22 x 1.5 | M 24 x 1.5 | 14 | 34 | 16 | 20 | 27 | 27 | 30 | 19.3 x 2.4 |
| **EWOM 45 NW 16 HS** | S | PN 400 | 20 | M 27 x 2 | M 30 x 2 | 18 | 38 | 16 | 33 | 30 | 32 | 36 | 23.6 x 2.9 |
| **EWOM 45 NW 20 HS** | S | PN 315 | 25 | M 33 x 2 | M 36 x 2 | 18 | 43 | 19 | 35 | 36 | 41 | 41 | 29.5 x 3.0 |
| **EWOM 45 NW 25 HS** | S | PN 250 | 30 | M 42 x 2 | M 42 x 2 | 18 | 50 | 24 | 36 | 50 | 50 | 50 | 38.0 x 3.0 |
| **EWOM 45 NW 32 HS** | S | PN 200 | 38 | M 42 x 2 | M 52 x 2 | 21 | 52 | 21 | 36 | 50 | 55 | 60 | 38.0 x 3.0 |

Series: LL = Very light  L = Light  S = Heavy – PN = Nominal pressure  PB = Max. operating pressure – Ø d2 = External pipe diameter

## Product versions

**XEWOM 45** Screw-in fitting, angle 45°, Socket (without union nut and cutting ring)

*Despite careful checking, we cannot guarantee the accuracy of all information included on this site, and we accept no liability.*