EWORK 45

Screw-in fitting, angle 45°

Properties

Connection 1	BSP external thread, cylindrical
Sealing form 1	O-ring and spacer diaphragm ring
Connection 2	metric cylindrical outer thread
Sealing form 2	24° inner cone
Design	Adjustable direction screw-in fitting
Construction	Angle 45°
Scope of supply	Socket with union nut and cutting ring
Material	Steel
Surface	electro galvanised



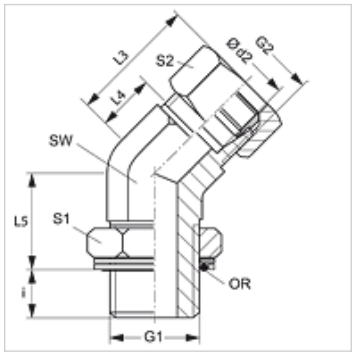

Note

Information about fitting, installation, pressure loads and permissible operating temperatures can be found in the technical information for pipe fittings.

Item

Identification	Series	Operating pressure	Ø d2 (mm)	G1	G2	i (mm)	L3 (mm)	L4 (mm)	L5 (mm)	AF (mm)	S1	S2	OR
EWORK 45 NW 04 HL	L	PN 315	6	G 1/8" -28	M 12 x 1.5	7	24	9	21	14	14	14	7.97 x 1.88
EWORK 45 NW 06 HL	L	PN 315	8	G 1/4" -19	M 14 x 1.5	9	27	12	20	14	19	17	10.77 x 2.62
EWORK 45 NW 08 HL	L	PN 315	10	G 1/4" -19	M 16 x 1.5	9	27	12	25	19	19	19	10.77 x 2.62
EWORK 45 NW 10 HL	L	PN 250	12	G 3/8" -19	M 18 x 1.5	9	28	14	28	19	22	22	13.94 x 2.62
EWORK 45 NW 13 HL	L	PN 250	15	G 1/2" -14	M 22 x 1.5	13	32	17	26	22	27	27	17.86 x 2.62
EWORK 45 NW 16 HL	L	PN 250	18	G 1/2" -14	M 26 x 1.5	13	33	17	32	27	27	32	17.86 x 2.62
EWORK 45 NW 20 HL	L	PN 160	22	G 3/4" -14	M 30 x 2	13	35	19	37	30	36	36	23.47 x 2.62
EWORK 45 NW 25 HL	L	PN 160	28	G 1" -11	M 36 x 2	15	40	23	37	36	41	41	29.74 x 3.53
EWORK 45 NW 32 HL	L	PN 160	35	G 1.1/4" -11	M 45 x 2	15	48	27	39	50	50	50	37.69 x 3.53
EWORK 45 NW 40 HL	L	PN 160	42	G 1.1/2" -11	M 52 x 2	15	49	26	39	50	55	60	44.04 x 3.53
EWORK 45 NW 03 HS	S	PN 315	6	G 1/4" -19	M 14 x 1.5	9	24	9	19	14	19	17	10.77 x 2.62
EWORK 45 NW 04 HS	S	PN 315	8	G 1/4" -19	M 16 x 1.5	9	27	12	23	19	19	19	10.77 x 2.62
EWORK 45 NW 06 HS	S	PN 250	10	G 3/8" -19	M 18 x 1.5	9	29	13	25	19	22	22	13.94 x 2.62
EWORK 45 NW 08 HS	S	PN 250	12	G 3/8" -19	M 20 x 1.5	9	33	17	25	22	22	24	13.94 x 2.62
EWORK 45 NW 13 HS	S	PN 250	16	G 1/2" -14	M 24 x 1.5	13	34	16	31	27	27	30	17.86 x 2.62
EWORK 45 NW 16 HS	S	PN 250	20	G 3/4" -14	M 30 x 2	12	38	16	34	30	36	36	23.47 x 2.62
EWORK 45 NW 20 HS	S	PN 250	25	G 1" -11	M 36 x 2	14	43	19	37	36	41	46	29.74 x 3.53
EWORK 45 NW 25 HS	S	PN 160	30	G 1.1/4" -11	M 42 x 2	15	50	24	38	50	50	50	37.69 x 3.53
EWORK 45 NW 32 HS	S	PN 160	38	G 1.1/2" -11	M 52 x 2	15	52	21	38	50	55	60	44.04 x 3.53

Series: LL = Very light L = Light S = Heavy – PN = Nominal pressure PB = Max. operating pressure – Ø d2 = External pipe diameter

Product versions

XEWORK 45	Screw-in fitting, angle 45°, Socket (without union nut and cutting ring)

Despite careful checking, we cannot guarantee the accuracy of all information included on this site, and we accept no liability.