GV 90 H

Rotary fitting, angle 90°, friction bearing

Properties

Connection 1	metric cylindrical outer thread
Sealing form 1	24° inner cone
Connection 2	metric cylindrical outer thread
Sealing form 2	24° inner cone
Design	Rotary fitting
Construction type	Friction bearing
Construction	Angle 90°
Scope of supply	Socket (without union nut and cutting ring)
Material	Steel
Surface	electro galvanised



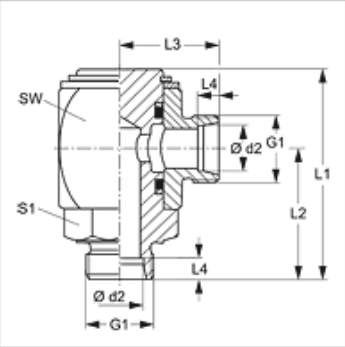

Note

Information about fitting, installation, pressure loads and permissible operating temperatures can be found in the technical information for pipe fittings.

Item

Identification	Series	Operating pressure	Ø d2 (mm)	G1	L1 (mm)	L2 (mm)	L3 (mm)	L4 (mm)	AF (mm)	S1
GV 90 NW 04 HL H	L	PN 250	6	M 12 x 1.5	49	31	23	7,0	27	19
GV 90 NW 06 HL H	L	PN 250	8	M 14 x 1.5	54	33	25	7,0	30	22
GV 90 NW 08 HL H	L	PN 250	10	M 16 x 1.5	57	36	27	7,0	32	24
GV 90 NW 10 HL H	L	PN 250	12	M 18 x 1.5	63	39	29	7,0	36	27
GV 90 NW 13 HL H	L	PN 250	15	M 22 x 1.5	68	42	32	7,0	40	32
GV 90 NW 16 HL H	L	PN 160	18	M 26 x 1.5	75	46	34	7,5	45	36
GV 90 NW 20 HL H	L	PN 160	22	M 30 x 2	89	54	41	7,5	55	41
GV 90 NW 25 HL H	L	PN 100	28	M 36 x 2	103	62	46	7,5	65	50
GV 90 NW 32 HL H	L	PN 100	35	M 45 x 2	115	69	53	10,5	75	55
GV 90 NW 40 HL H	L	PN 100	42	M 52 x 2	147	90	61	11,0	90	70
GV 90 NW 03 HS H	S	PN 400	6	M 14 x 1.5	51	33	25	7,0	27	19
GV 90 NW 04 HS H	S	PN 400	8	M 16 x 1.5	51	33	25	7,0	27	19
GV 90 NW 06 HS H	S	PN 400	10	M 18 x 1.5	56	35	27	7,5	30	22
GV 90 NW 08 HS H	S	PN 400	12	M 20 x 1.5	58	37	28	7,5	32	24
GV 90 NW 10 HS H	S	PN 400	14	M 22 x 1.5	66	42	32	8,0	36	27
GV 90 NW 13 HS H	S	PN 400	16	M 24 x 1.5	70	44	34	8,5	40	32
GV 90 NW 16 HS H	S	PN 250	20	M 30 x 2	79	50	38	10,5	45	36
GV 90 NW 20 HS H	S	PN 250	25	M 36 x 2	93	58	45	12,0	55	41
GV 90 NW 25 HS H	S	PN 250	30	M 42 x 2	109	68	52	13,5	65	50
GV 90 NW 32 HS H	S	PN 250	38	M 52 x 2	121	75	59	16,0	75	55

Series: LL = Very light L = Light S = Heavy – PN = Nominal pressure PB = Max. operating pressure – Ø d2 = External pipe diameter

Despite careful checking, we cannot guarantee the accuracy of all information included on this site, and we accept no liability.