GVM 90 H

Rotary fitting, angle 90°, friction bearing

HANSA-FLEX

Properties

Connection 1	metric cylindrical outer thread
Sealing form 1	Shape E
Connection 2	metric cylindrical outer thread
Sealing form 2	24° inner cone
Design	Rotary fitting (screw-in connector)
Construction type	Friction bearing
Construction	Angle 90°
Scope of supply	Socket (without union nut and cutting ring)
Material	Steel
Surface	electro galvanised



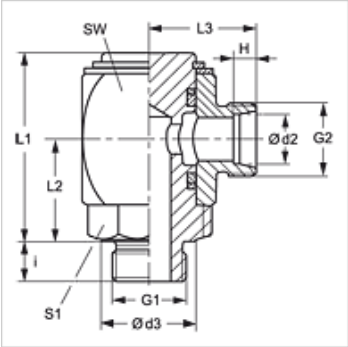

Note

Information about fitting, installation, pressure loads and permissible operating temperatures can be found in the technical information for pipe fittings.

Item

Identification	Series	Operating pressure	Ø d2 (mm)	G1	G2	d3 (mm)	i (mm)	H (mm)	L1 (mm)	L2 (mm)	L3 (mm)	AF (mm)	S1
GVM 90 NW 04 HL H	L	PN 250	6	M 10 x 1	M 12 x 1.5	14	8	7,0	40	21	23	27	17
GVM 90 NW 04 HL 12 H	L	PN 250	6	M 12 x 1.5	M 12 x 1.5	14	12	7,0	41	22	23	27	17
GVM 90 NW 06 HL H	L	PN 250	8	M 12 x 1.5	M 14 x 1.5	17	12	7,0	41	22	23	27	19
GVM 90 NW 08 HL H	L	PN 250	10	M 14 x 1.5	M 16 x 1.5	19	12	7,0	46	25	26	30	22
GVM 90 NW 08 HL 16 H	L	PN 250	10	M 16 x 1.5	M 16 x 1.5	22	12	7,0	48	27	27	32	24
GVM 90 NW 10 HL H	L	PN 250	12	M 16 x 1.5	M 18 x 1.5	22	12	7,0	48	27	27	32	24
GVM 90 NW 10 HL 18 H	L	PN 250	12	M 18 x 1.5	M 18 x 1.5	24	12	7,0	55	30	29	36	27
GVM 90 NW 13 HL H	L	PN 250	15	M 18 x 1.5	M 22 x 1.5	24	12	7,0	55	30	30	36	27
GVM 90 NW 13 HL 22 H	L	PN 250	15	M 22 x 1.5	M 22 x 1.5	27	14	7,0	59	33	32	40	32
GVM 90 NW 16 HL H	L	PN 160	18	M 22 x 1.5	M 26 x 1.5	27	14	7,5	59	33	32	40	32
GVM 90 NW 20 HL H	L	PN 160	22	M 26 x 1.5	M 30 x 2	32	16	7,5	66	35	36	45	36
GVM 90 NW 25 HL H	L	PN 100	28	M 33 x 2	M 36 x 2	40	18	7,5	78	41	41	55	41
GVM 90 NW 32 HL H	L	PN 100	35	M 42 x 2	M 45 x 2	50	20	10,5	92	50	48	65	50
GVM 90 NW 40 HL H	L	PN 100	42	M 48 x 2	M 52 x 2	55	22	11,0	102	56	53	75	55
GVM 90 NW 03 HS H	S	PN 400	6	M 12 x 1.5	M 14 x 1.5	17	12	7,0	41	22	25	27	19
GVM 90 NW 03 HS 14 H	S	PN 400	6	M 14 x 1.5	M 14 x 1.5	19	12	7,0	41	22	25	27	19
GVM 90 NW 04 HS H	S	PN 400	8	M 14 x 1.5	M 16 x 1.5	19	12	7,0	41	22	25	27	19
GVM 90 NW 06 HS 14 H	S	PN 400	10	M 14 x 1.5	M 18 x 1.5	19	12	7,5	46	25	27	30	22
GVM 90 NW 06 HS H	S	PN 400	10	M 16 x 1.5	M 18 x 1.5	22	12	7,5	46	25	27	30	22
GVM 90 NW 08 HS H	S	PN 400	12	M 18 x 1.5	M 20 x 1.5	24	12	7,5	48	27	28	32	24
GVM 90 NW 10 HS 18 H	S	PN 400	14	M 18 x 1.5	M 22 x 1.5	24	14	8,0	55	30	32	36	27
GVM 90 NW 10 HS H	S	PN 400	14	M 20 x 1.5	M 22 x 1.5	26	14	8,0	55	30	32	36	27
GVM 90 NW 13 HS H	S	PN 400	16	M 22 x 1.5	M 24 x 1.5	27	14	8,5	59	33	34	40	32
GVM 90 NW 16 HS H	S	PN 250	20	M 27 x 2	M 30 x 2	32	16	10,5	66	35	38	45	36
GVM 90 NW 25 HS H	S	PN 160	30	M 42 x 2	M 42 x 2	50	20	13,5	92	51	52	65	50
GVM 90 NW 32 HS H	S	PN 160	38	M 48 x 2	M 52 x 2	55	22	16,0	102	56	59	75	55

Series: LL = Very light L = Light S = Heavy – PN = Nominal pressure PB = Max. operating pressure – Ø d2 = External pipe diameter

Despite careful checking, we cannot guarantee the accuracy of all information included on this site, and we accept no liability.