GVR 90 ED VA

Rotary fitting, angle 90°, friction bearing

Properties

Connection 1	BSP external thread, cylindrical
Sealing form 1	Shape E
Connection 2	metric cylindrical outer thread
Sealing form 2	24° inner cone
Design	Rotary fitting (screw-in connector)
Construction type	Friction bearing
Construction	Angle 90°
Scope of supply	Socket (without union nut and cutting ring)
Material	Stainless steel



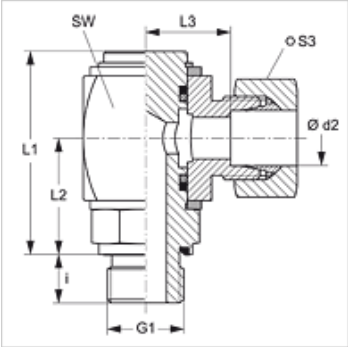

Note

Information about fitting, installation, pressure loads and permissible operating temperatures can be found in the technical information for pipe fittings.

Ordering information

Seals of NBR
FPM (Viton) on request

Item

Identification	Series	Operating pressure	Ø d2 (mm)	G1	i (mm)	L1 (mm)	L2 (mm)	L3 (mm)	AF (mm)	S3
GVR 90 NW 04 HL ED VA	L	PN 160	6	G 1/8" -28	8	47,0	26,5	16,5	27	14
GVR 90 NW 06 HL ED VA	L	PN 160	8	G 1/4" -19	12	47,5	26,5	16,5	27	14
GVR 90 NW 08 HL ED VA	L	PN 160	10	G 1/4" -19	12	47,5	26,5	17,5	27	19
GVR 90 NW 10 HL ED VA	L	PN 160	12	G 3/8" -19	12	47,5	26,5	18,0	27	24
GVR 90 NW 13 HL ED VA	L	PN 160	15	G 1/2" -14	14	58,5	33,5	24,0	36	27
GVR 90 NW 16 HL ED VA	L	PN 100	18	G 1/2" -14	14	58,5	33,5	23,5	36	32
GVR 90 NW 20 HL ED VA	L	PN 100	22	G 3/4" -14	16	66,0	38,0	27,5	41	36
GVR 90 NW 25 HL ED VA	L	PN 60	28	G 1" -11	18	72,0	42,5	29,5	46	41
GVR 90 NW 03 HS ED VA	S	PN 250	6	G 1/4" -19	8	47,5	26,5	18,5	27	17
GVR 90 NW 04 HS ED VA	S	PN 250	8	G 1/4" -19	8	47,5	26,5	18,5	27	19
GVR 90 NW 06 HS ED VA	S	PN 250	10	G 3/8" -19	12	47,5	26,5	18,0	27	22
GVR 90 NW 08 HS ED VA	S	PN 250	12	G 3/8" -19	12	47,5	26,5	18,0	27	24
GVR 90 NW 10 HS ED VA	S	PN 250	14	G 1/2" -14	14	58,5	33,5	25,0	36	27
GVR 90 NW 13 HS ED VA	S	PN 250	16	G 1/2" -14	14	58,5	33,5	24,5	36	30
GVR 90 NW 16 HS ED VA	S	PN 160	20	G 3/4" -14	16	66,0	38,0	26,5	41	36
GVR 90 NW 20 HS ED VA	S	PN 160	25	G 1" -11	18	72,0	42,5	29,0	46	46

Series: LL = Very light L = Light S = Heavy – PN = Nominal pressure PB = Max. operating pressure – Ø d2 = External pipe diameter

Spare parts

WD V	Soft seal for ED fittings

Despite careful checking, we cannot guarantee the accuracy of all information included on this site, and we accept no liability.