GVR 90 H

Rotary fitting, angle 90°, friction bearing

Properties

Connection 1	BSP external thread, cylindrical
Sealing form 1	Shape E
Connection 2	metric cylindrical outer thread
Sealing form 2	24° inner cone
Design	Rotary fitting (screw-in connector)
Construction type	Friction bearing
Construction	Angle 90°
Scope of supply	Socket (without union nut and cutting ring)
Material	Steel
Surface	electro galvanised



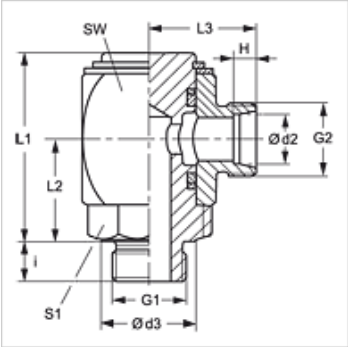

Note

Information about fitting, installation, pressure loads and permissible operating temperatures can be found in the technical information for pipe fittings.

Item

Identification	Series	Operating pressure	Ø d2 (mm)	G1	G2	d3 (mm)	i (mm)	H (mm)	L1 (mm)	L2 (mm)	L3 (mm)	AF (mm)	S1
GVR 90 NW 04 HL H	L	PN 250	6	G 1/8" -28	M 12 x 1.5	14	8	7,0	40	21	23	27	17
GVR 90 NW 04 HL 1/4 H	L	PN 250	6	G 1/4" -19	M 12 x 1.5	19	12	7,0	41	22	23	27	19
GVR 90 NW 06 HL H	L	PN 250	8	G 1/4" -19	M 14 x 1.5	19	12	7,0	46	25	25	30	22
GVR 90 NW 08 HL H	L	PN 250	10	G 1/4" -19	M 16 x 1.5	19	12	7,0	46	25	26	30	22
GVR 90 NW 08 HL 3/8 H	L	PN 250	10	G 3/8" -19	M 16 x 1.5	22	12	7,0	48	27	27	32	24
GVR 90 NW 10 HL H	L	PN 250	12	G 3/8" -19	M 18 x 1.5	22	12	7,0	48	27	27	32	24
GVR 90 NW 10 HL 1/2 H	L	PN 250	12	G 1/2" -14	M 18 x 1.5	27	14	7,0	55	30	29	36	27
GVR 90 NW 13 HL H	L	PN 250	15	G 1/2" -14	M 22 x 1.5	27	14	7,0	59	33	32	40	32
GVR 90 NW 16 HL H	L	PN 160	18	G 1/2" -14	M 26 x 1.5	27	14	7,5	59	33	32	40	32
GVR 90 NW 16 HL 3/4 H	L	PN 160	18	G 3/4" -14	M 26 x 1.5	32	16	7,5	66	35	32	45	32
GVR 90 NW 20 HL H	L	PN 160	22	G 3/4" -14	M 30 x 2	32	16	7,5	66	35	36	45	36
GVR 90 NW 20 HL 1 H	L	PN 160	22	G 1" -11	M 30 x 2	40	18	7,5	78	41	36	55	36
GVR 90 NW 25 HL H	L	PN 100	28	G 1" -11	M 36 x 2	40	18	7,5	78	41	41	55	41
GVR 90 NW 32 HL 1 1/4 H	L	PN 100	35	G 1.1/4" -11	M 45 x 2	50	20	10,5	92	51	48	65	50
GVR 90 NW 40 HL H	L	PN 100	42	G 1.1/2" -11	M 52 x 2	55	22	11,0	102	56	53	75	55
GVR 90 NW 03 HS H	S	PN 400	6	G 1/4" -19	M 14 x 1.5	19	12	7,0	41	22	25	27	19
GVR 90 NW 04 HS H	S	PN 400	8	G 1/4" -19	M 16 x 1.5	19	12	7,0	41	22	25	27	19
GVR 90 NW 06 HS H	S	PN 400	10	G 3/8" -19	M 18 x 1.5	22	12	7,5	46	25	27	30	22
GVR 90 NW 06 HS 1/4 H	S	PN 400	10	G 1/4" -19	M 18 x 1.5	19	12	7,5	41	22	27	27	22
GVR 90 NW 08 HS H	S	PN 400	12	G 3/8" -19	M 20 x 1.5	22	12	7,5	48	27	28	32	24
GVR 90 NW 08 HS 1/2 H	S	PN 400	12	G 1/2" -14	M 20 x 1.5	27	14	7,5	55	30	27	36	24
GVR 90 NW 10 HS H	S	PN 400	14	G 1/2" -14	M 22 x 1.5	27	14	8,0	55	30	32	36	27
GVR 90 NW 13 HS H	S	PN 400	16	G 1/2" -14	M 24 x 1.5	27	14	8,5	59	33	34	40	32
GVR 90 NW 16 HS H	S	PN 250	20	G 3/4" -14	M 30 x 2	32	16	10,5	66	35	38	45	36
GVR 90 NW 20 HS 3/4 H	S	PN 250	25	G 3/4" -14	M 36 x 2	32	16	12,0	66	35	45	55	41
GVR 90 NW 20 HS H	S	PN 250	25	G 1" -11	M 36 x 2	40	18	12,0	78	41	45	55	41
GVR 90 NW 25 HS H	S	PN 250	30	G 1.1/4" -11	M 42 x 2	50	20	13,5	92	51	52	65	50
GVR 90 NW 32 HS H	S	PN 250	38	G 1.1/2" -11	M 52 x 2	55	22	16,0	102	56	59	75	55

Series: LL = Very light L = Light S = Heavy – PN = Nominal pressure PB = Max. operating pressure – Ø d2 = External pipe diameter

Despite careful checking, we cannot guarantee the accuracy of all information included on this site, and we accept no liability.