NEW VA
Fitting, angle 90°

HANSA-FLEX

Properties

Connection 1	Pipe socket not pre-assembled
Sealing form 1	Cutting ring connection
Connection 2	metric cylindrical outer thread
Sealing form 2	24° inner cone
Design	Adjustable direction fitting
Construction	Angle 90°
Standard	DIN 2353 ISO 8434-1
Scope of supply	Pipe socket without union nut and cutting ring
Material	Stainless steel



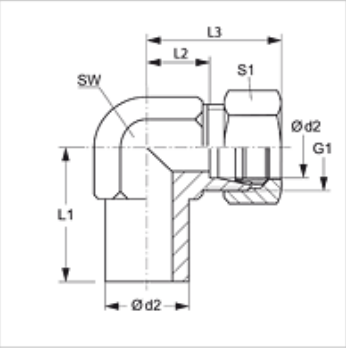

Item

Identification	Series	Operating pressure	Ø d2 (mm)	G1	L1 (mm)	L2 (mm)	L3 (mm)	AF (mm)	S1
NEW NW 04 HL VA	L	PN 315	6	M 12 x 1.5	26,0	12,0	27	12	14
NEW NW 06 HL VA	L	PN 315	8	M 14 x 1.5	27,5	14,0	29	12	17
NEW NW 08 HL VA	L	PN 315	10	M 16 x 1.5	29,0	15,0	30	14	19
NEW NW 10 HL VA	L	PN 315	12	M 18 x 1.5	29,5	17,0	32	17	22
NEW NW 13 HL VA	L	PN 315	15	M 22 x 1.5	32,5	21,0	36	19	27
NEW NW 16 HL VA	L	PN 315	18	M 26 x 1.5	35,5	23,5	40	24	32
NEW NW 20 HL VA	L	PN 160	22	M 30 x 2	38,5	27,5	44	27	36
NEW NW 25 HL VA	L	PN 160	28	M 36 x 2	41,5	30,5	47	36	41
NEW NW 32 HL VA	L	PN 160	35	M 45 x 2	51,0	34,5	56	41	50
NEW NW 40 HL VA	L	PN 160	42	M 52 x 2	56,0	40,0	63	50	60
NEW NW 03 HS VA	S	PN 630	6	M 14 x 1.5	27,0	16,0	31	12	17
NEW NW 04 HS VA	S	PN 630	8	M 16 x 1.5	27,5	17,0	32	14	19
NEW NW 06 HS VA	S	PN 630	10	M 18 x 1.5	30,0	17,5	34	17	22
NEW NW 08 HS VA	S	PN 630	12	M 20 x 1.5	31,0	21,5	38	17	24
NEW NW 10 HS VA	S	PN 630	14	M 22 x 1.5	35,0	22,0	40	19	27
NEW NW 13 HS VA	S	PN 400	16	M 24 x 1.5	36,5	24,5	43	24	30
NEW NW 16 HS VA	S	PN 400	20	M 30 x 2	44,5	26,5	48	27	36
NEW NW 20 HS VA	S	PN 400	25	M 36 x 2	50,0	30,0	54	36	46
NEW NW 25 HS VA	S	PN 400	30	M 42 x 2	55,0	35,5	62	41	50
NEW NW 32 HS VA	S	PN 315	38	M 52 x 2	63,0	41,0	72	50	60

Series: LL = Very light L = Light S = Heavy – PN = Nominal pressure PB = Max. operating pressure – Ø d2 = External pipe diameter

Product versions

NEW	Fitting, angle 90°, Steel
XNEW VA	Fitting, angle 90°, Stainless steel

Additional elements

VOM	Pre-assembly sockets

Despite careful checking, we cannot guarantee the accuracy of all information included on this site, and we accept no liability.