VEWO VA
Fitting, angle 90°

HANSA-FLEX

Properties

Connection 1	metric nut thread
Sealing form 1	24° outer cone with O-ring
Connection 2	metric cylindrical outer thread
Sealing form 2	24° inner cone
Design	Adjustable direction fitting
Construction	Angle 90°
Standard	ISO 8434-4
Scope of supply	Socket with union nut and cutting ring
Material	Stainless steel



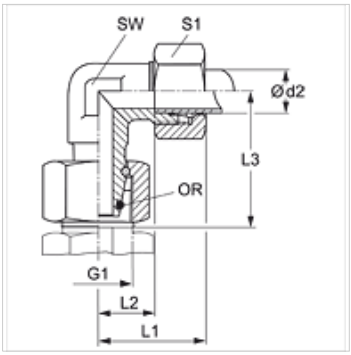

Note

Information about fitting, installation, pressure loads and permissible operating temperatures can be found in the technical information for pipe fittings.

Item

Identification	Series	Operating pressure	Ø d2 (mm)	G1	L1 (mm)	L2 (mm)	L3 (mm)	AF (mm)	S1	OR
VEWO NW 04 HL VA	L	PN 315	6	M 12 x 1.5	26,0	12,0	27	12	14	4.0 x 1.5
VEWO NW 06 HL VA	L	PN 315	8	M 14 x 1.5	27,5	14,0	29	12	17	6.0 x 1.5
VEWO NW 08 HL VA	L	PN 315	10	M 16 x 1.5	29,0	15,0	30	14	19	7.5 x 1.5
VEWO NW 10 HL VA	L	PN 315	12	M 18 x 1.5	29,5	17,0	32	17	22	9.0 x 1.5
VEWO NW 13 HL VA	L	PN 315	15	M 22 x 1.5	32,5	21,0	36	19	27	12.0 x 2.0
VEWO NW 16 HL VA	L	PN 315	18	M 26 x 1.5	35,5	23,5	40	24	32	15.0 x 2.0
VEWO NW 20 HL VA	L	PN 160	22	M 30 x 2	38,5	27,5	44	27	36	20.0 x 2.0
VEWO NW 25 HL VA	L	PN 160	28	M 36 x 2	41,5	30,5	47	36	41	26.0 x 2.0
VEWO NW 32 HL VA	L	PN 160	35	M 45 x 2	51,0	34,5	56	41	50	32.0 x 2.5
VEWO NW 40 HL VA	L	PN 160	42	M 52 x 2	56,0	40,0	63	50	60	38.0 x 2.5
VEWO NW 03 HS VA	S	PN 630	6	M 14 x 1.5	27,0	16,0	31	12	17	4.0 x 1.5
VEWO NW 04 HS VA	S	PN 630	8	M 16 x 1.5	27,5	17,0	32	14	19	6.0 x 1.5
VEWO NW 06 HS VA	S	PN 630	10	M 18 x 1.5	30,0	17,5	34	17	22	7.5 x 1.5
VEWO NW 08 HS VA	S	PN 630	12	M 20 x 1.5	31,0	21,5	38	17	24	9.0 x 1.5
VEWO NW 10 HS VA	S	PN 630	14	M 22 x 1.5	35,0	22,0	40	19	27	10.0 x 2.0
VEWO NW 13 HS VA	S	PN 400	16	M 24 x 1.5	36,5	24,5	43	24	30	12.0 x 2.0
VEWO NW 16 HS VA	S	PN 400	20	M 30 x 2	44,5	26,5	48	27	36	16.3 x 2.4
VEWO NW 20 HS VA	S	PN 400	25	M 36 x 2	50,0	30,0	54	36	46	20.3 x 2.4
VEWO NW 25 HS VA	S	PN 400	30	M 42 x 2	55,0	35,5	62	41	50	25.3 x 2.4
VEWO NW 32 HS VA	S	PN 315	38	M 52 x 2	63,0	41,0	72	50	60	33.3 x 2.4

PN = Nominal pressure PB = Max. operating pressure – Series: LL = Very light L = Light S = Heavy – Ø d2 = External pipe diameter

Product versions

VEWO	Fitting, angle 90°, Steel
XVEWO VA	Fitting, angle 90°, Stainless steel

Despite careful checking, we cannot guarantee the accuracy of all information included on this site, and we accept no liability.