# W MG
Fitting, angle 90°

HANSA-FLEX

## Properties

| | |
|---|---|
| **Connection 1 + 2** | metric cylindrical outer thread |
| **Sealing form 1 + 2** | 24° inner cone |
| **Design** | Fitting |
| **Construction** | Angle 90° |
| **Standard** | DIN 2353<br>ISO 8434-1 |
| **Scope of supply** | Socket with union nut and cutting ring |
| **Material** | Brass |



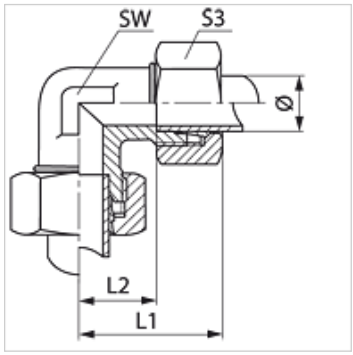


## Item

| Identification | Series | Operating pressure | External pipe Ø (mm) | L1 (mm) | L2 (mm) | AF (mm) | S3 |
|---|---|---|---|---|---|---|---|
| **W 04 LL MG** | LL | PN 63 | 4 | 21 | 11,0 | 7 | 10 |
| **W 06 LL MG** | LL | PN 63 | 6 | 21 | 9,5 | 9 | 12 |
| **W 08 LL MG** | LL | PN 63 | 8 | 23 | 11,5 | 12 | 14 |
| **W 10 LL MG** | LL | PN 63 | 10 | 27 | 15,5 | 14 | 17 |
| | | | | | | | |
| **W NW 04 HL MG** | L | PN 200 | 6 | 27 | 12,0 | 12 | 14 |
| **W NW 06 HL MG** | L | PN 200 | 8 | 29 | 14,0 | 12 | 17 |
| **W NW 08 HL MG** | L | PN 200 | 10 | 30 | 15,0 | 14 | 19 |
| **W NW 10 HL MG** | L | PN 200 | 12 | 32 | 17,0 | 17 | 22 |
| **W NW 13 HL MG** | L | PN 200 | 15 | 36 | 21,0 | 19 | 27 |
| **W NW 16 HL MG** | L | PN 200 | 18 | 40 | 23,5 | 24 | 32 |
| **W NW 20 HL MG** | L | PN 100 | 22 | 44 | 27,5 | 27 | 36 |
| **W NW 25 HL MG** | L | PN 100 | 28 | 47 | 30,5 | 36 | 41 |
| **W NW 32 HL MG** | L | PN 100 | 35 | 56 | 34,5 | 41 | 50 |
| **W NW 40 HL MG** | L | PN 100 | 42 | 63 | 40,0 | 50 | 60 |
| | | | | | | | |
| **W NW 03 HS MG** | S | PN 400 | 6 | 31 | 16,0 | 12 | 17 |
| **W NW 04 HS MG** | S | PN 400 | 8 | 32 | 17,0 | 14 | 19 |
| **W NW 06 HS MG** | S | PN 400 | 10 | 34 | 17,5 | 17 | 22 |
| **W NW 08 HS MG** | S | PN 400 | 12 | 38 | 21,5 | 17 | 24 |
| **W NW 10 HS MG** | S | PN 400 | 14 | 40 | 22,0 | 19 | 27 |
| **W NW 13 HS MG** | S | PN 250 | 16 | 43 | 24,5 | 24 | 30 |
| **W NW 16 HS MG** | S | PN 250 | 20 | 48 | 26,5 | 27 | 36 |
| **W NW 20 HS MG** | S | PN 250 | 25 | 54 | 30,0 | 36 | 46 |
| **W NW 25 HS MG** | S | PN 250 | 30 | 62 | 35,5 | 41 | 50 |
| **W NW 32 HS MG** | S | PN 200 | 38 | 72 | 41,0 | 50 | 60 |

Series: LL = Very light  L = Light  S = Heavy – PN = Nominal pressure  PB = Max. operating pressure – Ø = External pipe diameter

## Product versions

| | |
|---|---|
| **W** | Fitting, angle 90°, Steel |
| **W VA W90** | Fitting, angle 90°, Stainless steel |

*Despite careful checking, we cannot guarantee the accuracy of all information included on this site, and we accept no liability.*