WN VA

Screw-in fitting, angle 90°

HANSA-FLEX

Properties

Connection 1	NPT external threads
Sealing form 1	thread seal
Connection 2	metric cylindrical outer thread
Sealing form 2	24° inner cone
Design	Screw-in fitting
Construction	Angle 90°
Standard	DIN 2353 ISO 8434-1
Scope of supply	Socket with union nut and cutting ring
Material	Stainless steel



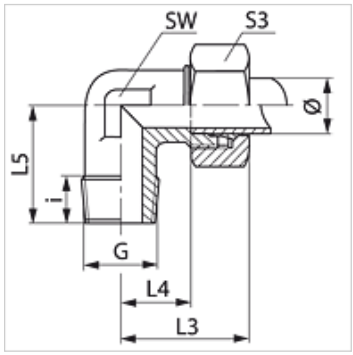

Note

Information about fitting, installation, pressure loads and permissible operating temperatures can be found in the technical information for pipe fittings.

Item

Identification	Series	Operating pressure	External pipe Ø (mm)	G	i (mm)	L3 (mm)	L4 (mm)	L5 (mm)	AF (mm)	S3
WN 04 LL VA	LL	PN 100	4	1/8" -27 NPT	7,0	21	11,0	17	9	10
WN 06 LL VA	LL	PN 100	6	1/8" -27 NPT	10,0	21	9,5	17	9	12
WN 08 LL VA	LL	PN 100	8	1/8" -27 NPT	10,0	21	9,5	17	12	14
WN NW 04 HL VA	L	PN 315	6	1/8" -27 NPT	10,0	27	12,0	20	12	14
WN NW 04 HL 1/4 VA	L	PN 315	6	1/4" -18 NPT	12,0	29	14,0	26	12	14
WN NW 04 HL 3/8 VA	L	PN 315	6	3/8" -18 NPT	15,3	33	18,0	28	14	14
WN NW 04 HL 1/2 VA	L	PN 315	6	1/2" -14 NPT	17,0	38	23,0	34	19	14
WN NW 06 HL 1/8 VA	L	PN 315	8	1/8" -27 NPT	110,0	29	14,0	26	12	17
WN NW 06 HL VA	L	PN 315	8	1/4" -18 NPT	12,0	29	14,0	26	12	17
WN NW 06 HL 3/8 VA	L	PN 315	8	3/8" -18 NPT	15,2	23	11,5	20	12	17
WN NW 06 HL 1/2 VA	L	PN 315	8	1/2" -14 NPT	17,5	30	15,0	26	12	17
WN NW 08 HL 1/8 VA	L	PN 315	10	1/8" -27 NPT	10,0	30	15,0	27	14	19
WN NW 08 HL VA	L	PN 315	10	1/4" -18 NPT	14,0	30	15,0	27	14	19
WN NW 08 HL 3/8 VA	L	PN 315	10	3/8" -18 NPT	15,2	30	15,0	27	14	19
WN NW 08 HL 1/2 VA	L	PN 315	10	1/2" -14 NPT	20,0	37	21,0	33	17	19
WN NW 10 HL 1/4 VA	L	PN 315	12	1/4" -18 NPT	14,0	32	17,0	28	17	22
WN NW 10 HL VA	L	PN 315	12	3/8" -18 NPT	12,5	32	17,0	28	17	22
WN NW 10 HL 1/2 VA	L	PN 315	12	1/2" -14 NPT	19,0	38	23,0	34	19	22
WN NW 13 HL 3/8 VA	L	PN 315	15	3/8" -18 NPT	13,0	36	21,0	34	19	27
WN NW 13 HL VA	L	PN 315	15	1/2" -14 NPT	18,5	36	21,0	34	19	27
WN NW 16 HL 3/8 VA	L	PN 315	18	3/8" -18 NPT	15,3	40	23,5	36	24	32
WN NW 16 HL VA	L	PN 315	18	1/2" -14 NPT	20,0	40	23,5	36	24	32
WN NW 16 HL 3/4 VA	L	PN 315	18	3/4" -14 NPT	18,5	40	23,5	40	24	32
WN NW 20 HL 1/2 VA	L	PN 160	22	1/2" -14 NPT	20,0	44	27,5	42	27	36
WN NW 20 HL VA	L	PN 160	22	3/4" -14 NPT	18,5	44	27,5	42	27	36
WN NW 25 HL 3/4 VA	L	PN 160	28	3/4" -14 NPT	20,0	47	30,5	48	36	41
WN NW 25 HL VA	L	PN 160	28	1" -11.5 NPT	24,0	47	30,5	48	36	41
WN NW 32 HL VA	L	PN 160	35	1.1/4" -11.5 NPT	25,5	56	34,5	54	41	50
WN NW 40 HL VA	L	PN 160	42	1.1/2" -11.5 NPT	26,0	63	40,0	61	50	60
WN NW 03 HS VA	S	PN 630	6	1/4" -18 NPT	12,0	31	16,0	26	12	17
WN NW 03 HS 3/8 VA	S	PN 630	6	3/8" -18 NPT	15,3	32	17,5	27	14	17
WN NW 03 HS 1/2 VA	S	PN 630	6	1/2" -14 NPT	20,0	36	21,0	34	17	17
WN NW 04 HS VA	S	PN 630	8	1/4" -18 NPT	15,0	32	17,0	27	14	19
WN NW 04 HS 3/8 VA	S	PN 630	8	3/8" -18 NPT	15,3	33	18,0	28	14	19
WN NW 04 HS 1/2 VA	S	PN 630	8	1/2" -14 NPT	20,0	38	23,0	34	17	19
WN NW 06 HS 1/4 VA	S	PN 630	10	1/4" -18 NPT	15,0	34	17,5	28	17	22
WN NW 06 HS VA	S	PN 630	10	3/8" -18 NPT	12,0	34	17,5	28	17	22
WN NW 06 HS 1/2 VA	S	PN 630	10	1/2" -14 NPT	20,0	39	22,5	32	17	22
WN NW 08 HS 1/4 VA	S	PN 630	12	1/4" -18 NPT	15,0	38	21,5	29	17	24
WN NW 08 HS VA	S	PN 630	12	3/8" -18 NPT	12,5	38	21,5	28	17	24
WN NW 08 HS 1/2 VA	S	PN 630	12	1/2" -14 NPT	20,0	39	21,5	34	17	24
WN NW 10 HS 3/8 VA	S	PN 630	14	3/8" -18 NPT	15,3	40	22,0	30	19	27

Despite careful checking, we cannot guarantee the accuracy of all information included on this site, and we accept no liability.

WN VA
Screw-in fitting, angle 90°

Item

Identification	Series	Operating pressure	External pipe Ø (mm)	G	i (mm)	L3 (mm)	L4 (mm)	L5 (mm)	AF (mm)	S3
WN NW 10 HS VA	S	PN 630	14	1/2" -14 NPT	18,0	40	22,0	34	19	27
WN NW 13 HS 3/8 VA	S	PN 400	16	3/8" -18 NPT	15,3	43	24,5	32	24	30
WN NW 13 HS VA	S	PN 400	16	1/2" -14 NPT	19,0	43	24,5	36	24	30
WN NW 13 HS 3/4 VA	S	PN 400	16	3/4" -14 NPT	20,0	43	25,0	40	24	30
WN NW 16 HS 1/2 VA	S	PN 400	20	1/2" -14 NPT	20,0	48	26,5	42	27	36
WN NW 16 HS VA	S	PN 400	20	3/4" -14 NPT	20,0	48	26,6	42	27	36
WN NW 20 HS VA	S	PN 400	25	1" -11.5 NPT	24,0	54	30,0	48	36	46
WN NW 25 HS VA	S	PN 400	30	1.1/4" -11.5 NPT	25,5	62	35,5	54	41	50
WN NW 32 HS VA	S	PN 315	38	1.1/2" -11.5 NPT	26,0	72	41,0	61	50	60

PN = Nominal pressure PB = Max. operating pressure – Series: LL = Very light L = Light S = Heavy – Ø = External pipe diameter

Product versions

WN	Screw-in fitting, angle 90°, Steel
WN MG	Screw-in fitting, angle 90°, Brass
XWN VA	Screw-in fitting, angle 90°, Stainless steel

Despite careful checking, we cannot guarantee the accuracy of all information included on this site, and we accept no liability.