WR VA
Screw-in fitting, angle 90°

Properties

Connection 1	BSP external thread, cylindrical
Sealing form 1	thread seal
Connection 2	metric cylindrical outer thread
Sealing form 2	24° inner cone
Design	Screw-in fitting
Construction	Angle 90°
Standard	DIN 2353 ISO 8434-1
Scope of supply	Socket with union nut and cutting ring
Material	Stainless steel



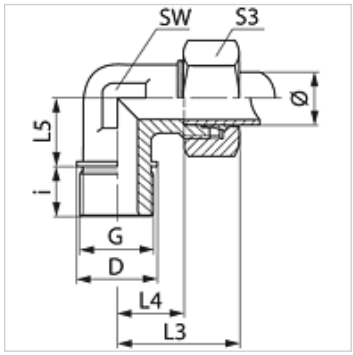

Note

Information about fitting, installation, pressure loads and permissible operating temperatures can be found in the technical information for pipe fittings.

Item

Identification	Series	Operating pressure	External pipe Ø (mm)	G	D (mm)	i (mm)	L3 (mm)	L4 (mm)	L5 (mm)	AF (mm)	S3
WR NW 20 HL VA	L	PN 160	22	G 3/4" -14	32	16	44	27,5	26	27	36
WR NW 25 HL VA	L	PN 160	28	G 1" -11	39	18	47	30,5	30	36	41
WR NW 32 HL VA	L	PN 160	35	G 1.1/4" -11	49	20	56	34,5	34	41	50
WR NW 40 HL VA	L	PN 160	42	G 1.1/2" -11	55	22	63	40,0	39	50	60
WR NW 16 HS VA	S	PN 400	20	G 3/4" -14	32	16	48	26,5	26	27	36
WR NW 20 HS VA	S	PN 400	25	G 1" -11	39	18	54	30,0	30	36	41
WR NW 25 HS VA	S	PN 250	30	G 1.1/4" -11	49	20	62	35,5	34	41	50
WR NW 32 HS VA	S	PN 250	38	G 1.1/2" -11	22	55	72	41,0	39	50	60

Series: LL = Very light L = Light S = Heavy – PN = Nominal pressure PB = Max. operating pressure – Ø = External pipe diameter

Product versions

WR	Screw-in fitting, angle 90°, Steel
WR MG	Screw-in fitting, angle 90°, Brass
XWR VA	Screw-in fitting, angle 90°, Stainless steel

Despite careful checking, we cannot guarantee the accuracy of all information included on this site, and we accept no liability.