DKR
Edge sealing ring

Properties

Design	Edge sealing ring
Construction type	for imperial threads
Material	Steel
Surface	electro galvanised



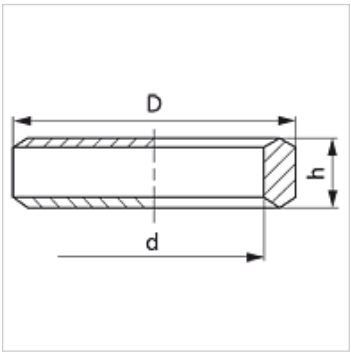

Item

Identification	for thread	D (mm)	d (mm)	h (mm)
DKR 1/8	G 1/8”	14	9,80	3,2
DKR 1/4	G 1/4”	18	13,30	4,5
DKR 3/8	G 3/8”	22	16,80	4,5
DKR 1/2	G 1/2”	26	21,10	5,0
DKR 3/4	G 3/4”	32	26,60	5,0
DKR 1	G 1"	39	33,40	6,0

Product versions

DKR VA	Edge sealing ring for imperial threads, Stainless steel

Despite careful checking, we cannot guarantee the accuracy of all information included on this site, and we accept no liability.